CLAMP CONNECTION TYPE DIAPHRAGM SEAL

DT106

DT106 sanitary diaphragm seal is designed to be used in food, beverage industry and pharmaceutical industry. It is easy to assemble with pressure gauges, pressure switches and pressure instruments.



Technical Data

Instrument connection: female thread ¼" to ½" BSP or NPT
Process connection: 1", 1½", 2" (ISO2852), 25, 32, 40, 50 (DIN32676)
Temperature limited: -40~+150℃
Pressure range limited: (for pressure gauge)

Size	Minimum Limited	Maximum Limited
1" & 1½"	0~6 Kg/cm²	0~40 Kg/cm²
2"	-1~1.5 Kg/cm²	0~16 Kg/cm²

Material: Body– SS316 (standard); options– SS316L, Hastelloy C276, and others available on request
Membrane: SS316L (standard); Options– Hastelloy C276, tantalum, titanium and others on request.

Dimensions

Item	Description of Parts
a	Upper housing
b	Filing port
c	Membrane
d	Instrument connection

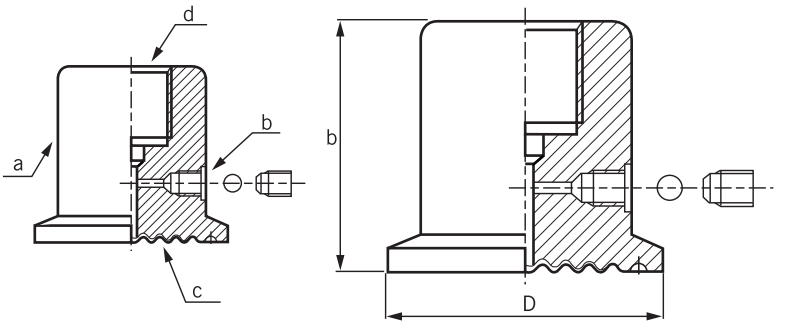

Dimensional Data unit=mm

ISO	b	D
1"	37	50.5
1½"	37	50.5
2"	37	64

DIN	b	D
25	37	50.5
32	37	50.5
40	37	50.5
50	45	64

Ordering Information

DT106	Code	Instrument Connection (Female)
		(A) ¼"BSP (B) ¼"NPT (C) ⅜"BSP (D) ⅜"NPT (E) ½"BSP (F) ½"NPT

Code	Process connection type
ISO	ISO2852
DIN	DIN32676

Code	Process connection rating
ISO	(1) 1" (2) 1½" (3) 2"
DIN	(4) 25 (5) 32 (6) 40 (7) 50

Code	Body material
	(S) SS316 (0) Option

Code	Membrane material
	(1) SS316L (2) HC276 (3)Tantalum (4) Option

Code	Pressure Range
	(0) Diaphragm seal only (R) Directly fill out pressure gauge

DT106							Complete ordering code

WWW.NEW-FLOW.DE | Tel: +49 3682 49099 | Fax: +49 3682 49093 | E-Mail: info@mess-regel.de