3-PIECE BALL VALVES – With High Position Pad

N-3MDT – THREAD N-3MDB – BUTT WELD N-3MDS – SOCKET WELD

Technical Data



Full Port, 3 piece type
Material: Wetted parts ASTM A351 CF8M / 316
Connection Size: ¼"(8mm), ⅜"(10mm), ½"(15mm), ¾"(20mm), 1"(25mm), 1¼"(32mm), 1½"(40mm), 2"(50mm), 2½"(65mm), 3"(80mm), 4"(100mm)
Connection Type: Thread, Socket weld and Butt weld ends available
ISO 5211 Mounting Pad- High postion pad
Locking Device: Valve operated locking in open or closed position
Working Temperature Limited: -20°F ~ 350°F (-5°C ~ 175°C)
Wokring Pressure Limited: 1000psi (70kg/cm²) for ¼"~1"; 800psi (56kg/cm²) for 1¼"~2"; 600psi (42kg/cm²) for 2½"~4"
Valves inspected and tested according to **API 598 standard**.

Dimensions

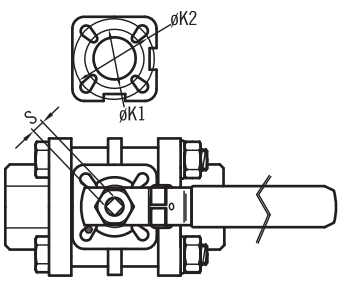

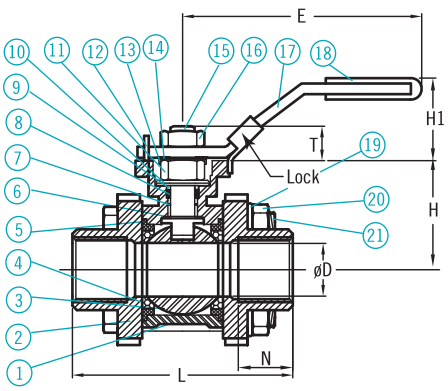

Thread

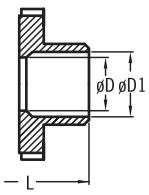

Socket Weld

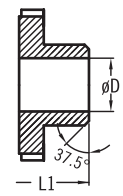

Butt Weld

unit=mm

mm	Size inch	øD	L±2.0	H	E±3.0	T	S	øD1	L1±2.0	ISO5211 øK1	ISO5211 øK2	TORQUE Inch/Lbs	N	H1±3.0	CV Factor	Wt/Kg
08	¼	11.6	57.7	38	143	9	9	14.2	70	F03	F04	50	20	26	6.6	0.41
10	⅜	12.6	63.7	38	143	9	9	17.7	70	F03	F04	50	20	26	7.9	0.39
15	½	15	62.7	38	143	9	9	21.8	70	F03	F04	50	20	26	11.2	0.42
20	¾	20	68	47	143	9	9	27.2	85	F03	F04	80	21	26	21	0.63
25	1	25	79.6	57.2	160	11	11	34	95	F04	F05	100	21	32	35	0.9
32	1¼	32	90.6	62.5	160	11	11	42.7	110	F04	F05	280	27.5	32	57	1.4
40	1½	38	106.7	77.5	187	14	14	48.8	120	F05	F07	300	26.5	42	80	2.3
50	2	50	126.5	86.5	187	14	14	61.2	142	F05	F07	350	31	42	150	3.16
65	2½	65	162	108	310	17	17	74	168	F07	F10	500	28	53	265	9
80	3	80	184	115	310	17	17	90	182	F07	F10	750	33.5	53	415	13.1
100	4	100	228	135	400	22	22	115.6	227	F10	F12	1000	41	26	780	22

Parts List

Item	Parts Name	Material
1	Body	ASTM A351 CF8M / 316
2	Cap	ASTM A351 CF8M / 316
3	Ball	ASTM A351 CF8M / 316
4	Seat	PTFE / RPTFE
5	Gasket	PTFE / RPTFE
6	Thrust Washer	PTFE / RPTFE
7	O-Ring	Viton
8	Stem Packing	PTFE / RPTFE
9	Ring	AISI 304
10	Belleville Washer	AISI 304
11	Stem Nut	AISI 304
12	Stop Pin	AISI 304
13	Lock Washer	AISI 304
14	Ring	AISI 304
15	Stem	AISI 316
16	Handle Nut	AISI 304
17	Handle	AISI 304
18	Handle Sleeve	Plastic
19	Spring Washer	AISI 304
20	Bolt Nut	AISI 304
21	Bolt	AISI 304

Pressure–Temperature

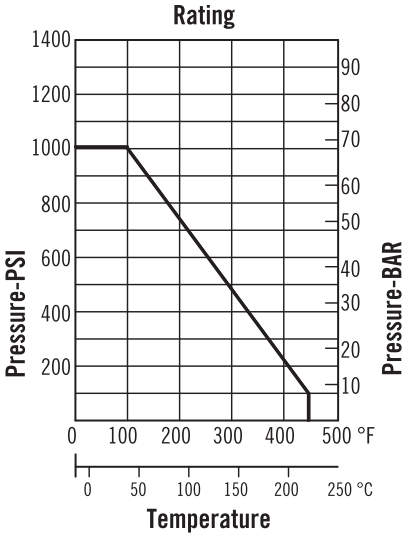

Ordering Information

N-3MD	Code	Model
	T	Thread
	B	Butt Weld
	C	Socket Weld

Code	Body Material
S	CF8M / SS316

Code	Connection Size
	(A) ¼" (B) ⅜" (C) ½" (D) ¾" (E) 1" (F) 1¼"
	(G) 1½" (H) 2" (I) 2½" (J) 3" (K) 4"

N-3MD				Complete Ordering Code

WWW.NEW-FLOW.DE | Tel: +49 3682 49099 | Fax: +49 3682 49093 | E-Mail: info@mess-regel.de