SANITARY BALL VALVES – With High Position Pad

N-3MDH-B – BUTT WELD ENDS N-3MDH-C – T-CLAMP

Technical Data

Full Port, 3 piece type- Inside port finish Ra≤0.4
Blow-Out Proof Stem
Material: Wetted parts ASTM A351 CF8M / 316
Connection Size: ½"(15mm), ¾"(20mm), 1"(25mm), 1½"(40mm), 2"(50mm), 2½"(65mm), 3"(80mm), 4"(100mm)
Connection Type: Clamp & Tube butt weld ends available
ISO 5211 Mounting Pad- High postion pad; Square stem
Locking Device: Valve operated locking in open or closed position
Working Temperature Limited: -20°F ~ 350°F (-5°C ~ 175°C)
Wokring Pressure Limited: 1000psi (70kg/cm²) for ½"~1";
800psi (56kg/cm²) for 1½"~2";
600psi (42kg/cm²) for 2½"~4"
Valves inspected and tested according to **API 598 standard**.

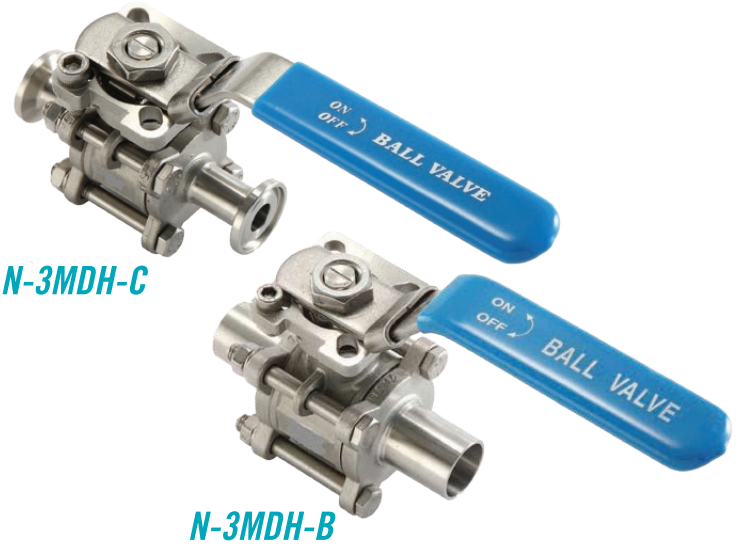

N-3MDH-C

N-3MDH-B

Dimensions

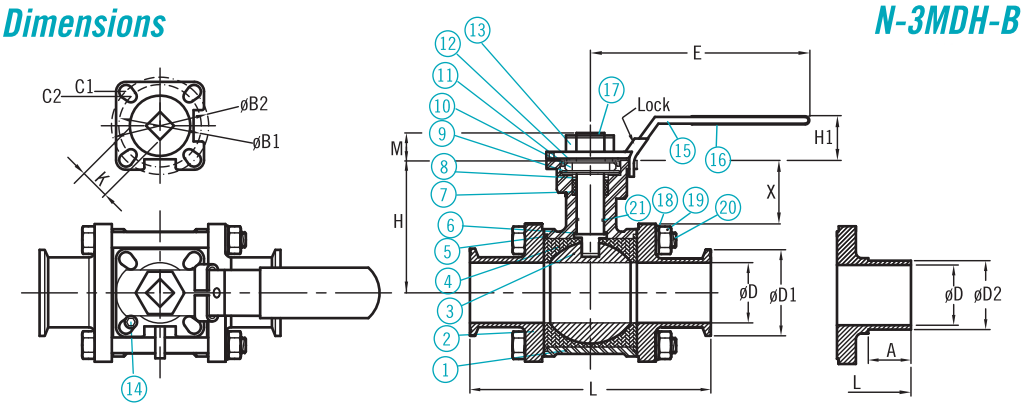

unit=mm

mm	Size inch	ISO-5211	øD±0.5	L±1.0	H	M±1.5	øB1	øB2	K	D1	E	D2	H1	A	C1	C2	TORQUE Inch/Lbs	X
15	½	F03-F04	9.5	89	37	9	36	42	9	25.4	143	12.7	26	18	6	6	90	15.5
20	¾	F03-F04	15.9	101	47	9	36	42	9	25.4	143	19.1	26	21	6	6	100	20.6
25	1	F04-F05	22.2	114	57.2	11	42	50	11	50.4	160	25.4	34	25	6	8	140	29.0
40	1½	F05-F07	35.0	140	78.2	14	50	70	14	50.4	187	38.2	43	28	8	10	240	39.0
50	2	F05-F07	47.6	156	86.2	14	50	70	14	63.8	187	50.8	43	25	8	10	480	42.0
65	2½	F07-F10	60.3	197	109.2	17	70	102	17	77.6	310	63.5	53	35	10	12	650	48.0
80	3	F07-F10	73.0	229	117.7	17	70	102	17	91	310	76.2	53	43	10	12	1150	48.7
100	4	F10-F12	97.4	241	141.2	22	102	125	22	119	400	100.6	56	37	12	14	1400	34.0

Parts List

Item	Parts Name	Material
1	Body	ASTM A351 CF8M / 316
2	Cap	ASTM A351 CF8M / 316
3	Ball	ASTM A351 CF8M / 316
4	Seat	PTFE / TFM1600
5	Gasket	PTFE
6	Thrust Packing	PTFE
7	Stem Packing	PTFE
8	Ring	AISI 304
9	Belleville Washer	AISI 304
10	Stem Nut	AISI 304
11	Lock Washer	AISI 304
12	Ring	AISI 304
13	Handle Nut	AISI 304
14	Stop Pin	AISI 304
15	Handle	AISI 304
16	Handle Sleeve	Plastic
17	Stem	AISI 316
18	Spring Washer	AISI 304
19	Blot Nut	AISI 304
20	Blot	AISI 304
21	O-Ring	Viton

Pressure–Temperature

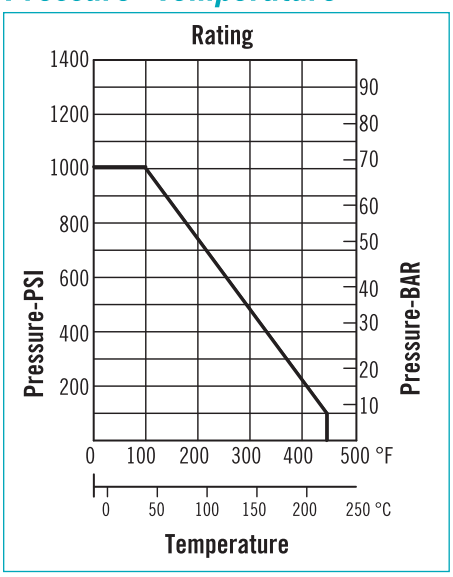

Ordering Information

N-3MDH	Code	Model
	B	Butt Weld Ends
	C	T-Clamp

Code	Body Material
S	CF8M / SS316

Code	Connection Size
	(A) ½" (B) ¾" (C) 1" (D) 1½"
	(E) 2" (F) 2½" (G) 3" (H) 4"

N-3MDH				Complete Ordering Code

WWW.NEW-FLOW.DE | Tel: +49 3682 49099 | Fax: +49 3682 49093 | E-Mail: info@mess-regel.de