METAL TUBE FLOW METER BR250S– SPRING TYPE



Vertical Flow Direction



Horizontal Flow Direction

Technical Data

BR250S for high flows of gas, liquid, steam and oil

Case Material: Aluminum alloy case with paint; SS316 available
Body Wetted Parts Material: SS316, others on request
Indication via magnetic coupling (no sealed)
Lens Material: Safety Glass
Scales Calibrated: in l/h, m³/h, kg/h, %, etc.
Flow Rates For:
– Water: 30 l/h up to 120,000 l/h (special ranges on request)
– Air: 0.8 Nm³/h up to 1,200 Nm³/h (special ranges on request)
Connection Type: Only Flange type
Connection Size: ½"~ 5"
Mounting: Vertical and Horizontal available
Mounting Length: 250mm standard; Connection size bigger than 3", mounting length is 300mm; 300mm for explosion proof
Protection Class: IP65 or Explosion proof, Class I, Groups B, C & D; Class II, Groups E, F & G; NEMA 4, 7, 9
Accuracy: ±2.5% F.S
Max. Pressure: 40 kg/cm² (standard); Option: up to 100 kg/cm²
Temperature: -50°C to +200°C (300°C Option)
Alarm Switch: Micro switch, Inductive switch, Reed switch available

Principle

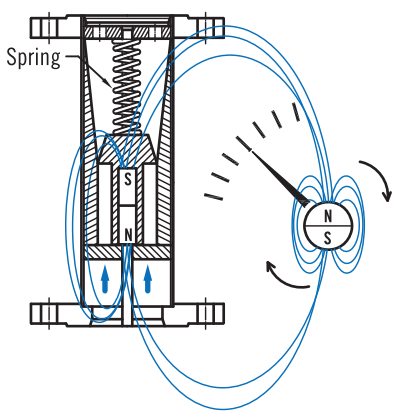

Dimensions-mm

IP65

Case Type: (A-1) Rectangle Bolt Tight Type
Housing Material: Alunimum alloy case with paint

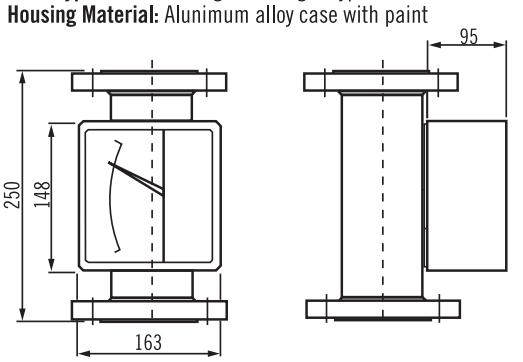

IP65

Case Type: (B-1) Round Bayonet Ring Type (only for indicating)
Housing Material: SS316

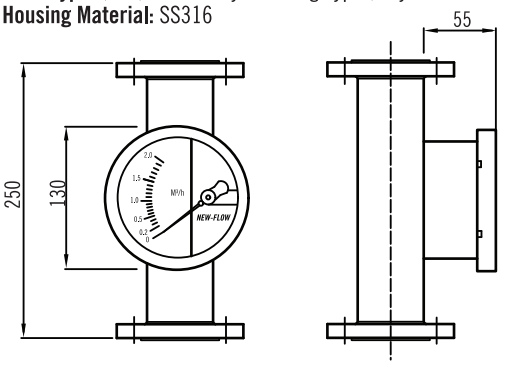

IP65

Case Type: (A-2) Round Screw Tight Type
Housing Material: Aluminum alloy
Case Type: (B-2) Round Screw Tight Type
Housing Material: SS316

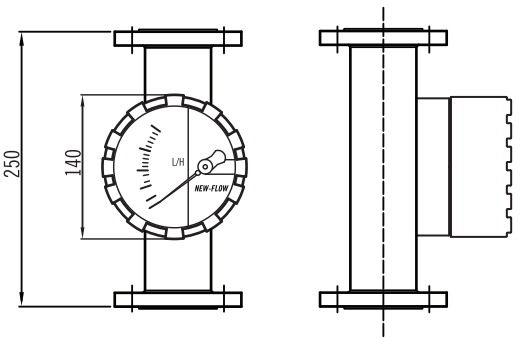

Explosion Proof

Class I, Groups B,C & D; Class II, Groups E,F & G; NEMA 4,7,9

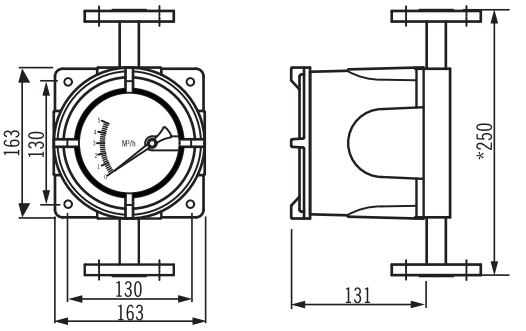

*Mounting length: 250mm standard
Connection size bigger than 3", mounting length is 300mm.

WWW.NEW-FLOW.DE | Tel: +49 3682 49099 | Fax: +49 3682 49093 | E-Mail: info@mess-regel.de

Alarm / Analog Output

BR-250S/GS-M (Micro Switch)

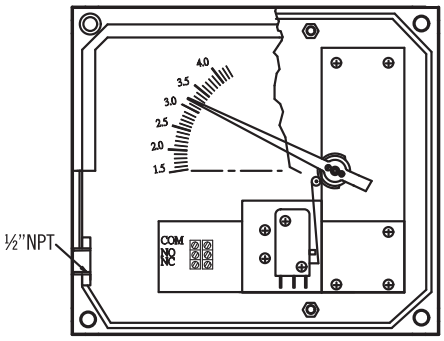

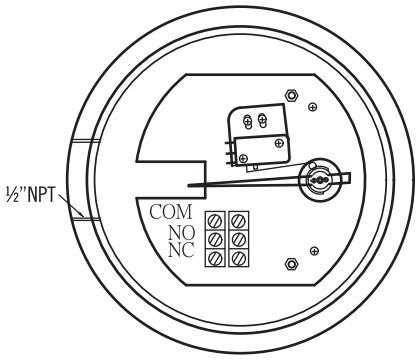

Adjustable Micro Switch, Series BR250S/GS-M
1 adjustable alarm contact
Load: 5A/250VAC/125VAC/30VDC
Temperature: -25°C ~ +100°C (AMB)
Hysteresis: ±10% F.S (Dead Band)

BR-250S/GS-R (Reed Switch)

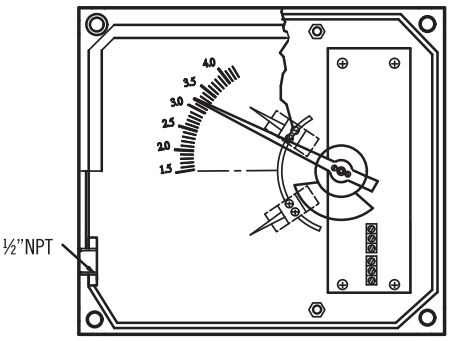

Alarm Switch: One or Two setting point, form A bistable type (N.O type)
Hysteresis: ±10% F.S (Dead Band)
Switch Rating: AC 125V 0.5A / DC 100V 10W / Max. DC 250V<1mA

1 adjustable alarm
Contact setting point should be within 10% to 100% of F.S
2 adjustable alarm
The second setting point should be a gap 40% from first setting point.

BR-250S/GS-C (Inductive Switch)

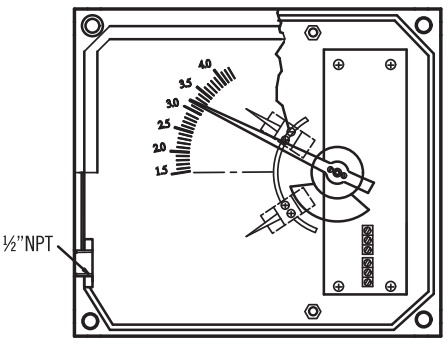

Adjustable inductive alarm switch
Hysteresis: ±1% F.S (Dead Band)
Inductive sensors slotted type: 3.5mm slot switch
DC. voltage 2 wire's to DIN19234 (NAMUR) for use in hazardous areas.
– Power supply: 8 VDC (Ri.approx. 1kΩ)
– Current consumption: Active face uncoved 3mA; Active face coved 1mA
– Ambient temp.: -25°C ~ +100°C
Isolated barriers output relay for inductive sensor:
– Rail mounting
– Control circuit EEx ia IIC
– EMC acc to NAMUR NE21
– Contact loading 253 VAC 2A SPDT 40 VDC 2A

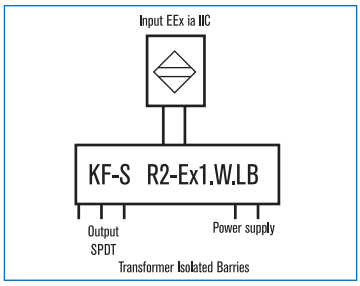

1 adjustable alarm
Contact setting point should be within
10% to 100% of F.S
For 24VDC: KDF2-SR2-Ex1.W
115VAC: KFA5-SR2-Ex1.W
230VAC: KFA6-SR2-Ex1.W

2 adjustable alarm
The second setting point should be a gap
65% from first setting point.
For 24VDC: KDF2-SR2-Ex2.W
115VAC: KFA5-SR2-Ex2.W
230VAC: KFA6-SR2-Ex2.W

BR-250S/GT (Analog Output)

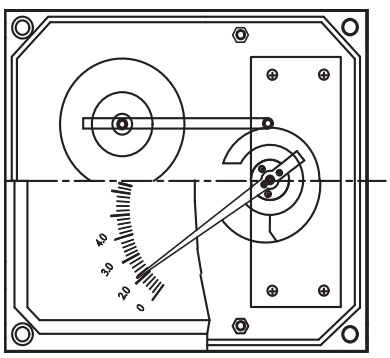

Electric Transmitter BR-250S/GT
Analog output available: 4~20mA (2-wire)
No Alarm Switch Available
Power Supplier: 24VDC
Temperature: +25°C ~ +100°C (AMB)

WWW.NEW-FLOW.DE | Tel: +49 3682 49099 | Fax: +49 3682 49093 | E-Mail: info@mess-regel.de

Flow Direction Type

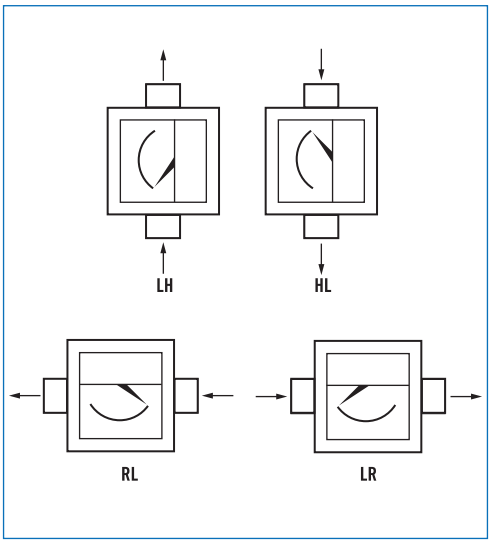

Standard Scales

Tube	L/H 20°C Water	NM^3/H Air 20°C 1.013bar	Pressure Loss psig	Connection	Accuracy
BR2501S	30 ~ 300	0.8 ~ 8	≤3.5	1/2"	±2.5% F.S
BR2502S	40 ~ 400	1 ~ 10	≤3.8	1/2"	±2.5% F.S
BR2503S	50 ~ 500	1.2 ~ 12	≤3.7	1/2"	±2.5% F.S
BR2504S	70 ~ 700	1.7 ~ 17	≤3.6	1/2"	±2.5% F.S
BR2505S	80 ~ 800	2 ~ 20	≤3.8	1/2"	±2.5% F.S
BF2506S	100 ~ 1000	2.7 ~ 27	≤4.0	1/2"	±2.5% F.S
BF2507S	150 ~ 1500	4 ~ 40	≤4.2	1/2"	±2.5% F.S
BF2508S	180 ~ 1800	5 ~ 50	≤4.5	1/2"	±2.5% F.S
BF2509S	150 ~ 1500	4 ~ 40	≤3.8	3/4"	±2.5% F.S
BF2510S	200 ~ 2000	6 ~ 60	≤4.0	3/4"	±2.5% F.S
BF2511S	300 ~ 3000	9 ~ 90	≤3.4	1"	±2.5% F.S
BF2512S	400 ~ 4000	12 ~ 120	≤3.6	1"	±2.5% F.S
BF2513S	600 ~ 6000	15 ~ 150	≤3.9	1"	±2.5% F.S
BF2514S	600 ~ 6000	15 ~ 150	≤3.6	1½"	±2.5% F.S
BF2515S	800 ~ 8000	24 ~ 240	≤3.8	1½"	±2.5% F.S
BF2516S	1000 ~ 10000	30 ~ 300	≤3.9	1½"	±2.5% F.S
BF2517S	1200 ~ 12000	35 ~ 350	≤4.3	1½"	±2.5% F.S
BF2518S	1200 ~ 12000	35 ~ 350	≤3.2	2"	±2.5% F.S
BF2519S	1600 ~ 16000	50 ~ 500	≤3.4	2"	±2.5% F.S
BF2520S	2000 ~ 20000	75 ~ 750	≤3.8	2"	±2.5% F.S
BF2521S	2500 ~ 25000	120 ~ 1200	≤4.1	2"	±2.5% F.S
BF2522S	2000 ~ 20000	75 ~ 750	≤3.0	2½"	±2.5% F.S
BF2523S	3000 ~ 30000	----------	≤3.2	2½"	±2.5% F.S
BF2524S	3000 ~ 30000	----------	≤3.4	3"	±2.5% F.S
BF2525S	4000 ~ 40000	----------	≤3.7	3"	±2.5% F.S
BF2526S	5000 ~ 50000	----------	≤3.6	4"	±2.5% F.S
BF2527S	6000 ~ 60000	----------	≤4.2	4"	±2.5% F.S
BF2528S	10000~100000	----------	≤3.8	5"	±2.5% F.S
BF2529S	12000~120000	----------	≤4.3	5"	±2.5% F.S

NOTE
Performance Technical Data are effective with date of issue and are subject to change without prior notice.

WWW.NEW-FLOW.DE | Tel: +49 3682 49099 | Fax: +49 3682 49093 | E-Mail: info@mess-regel.de

Ordering Information

BR250S	Code	Type
	G	Indicating only
	GS	Indicating + switch
	GT	Indicating 4~20mA (no alarm switch available)

Code	Alarm
0	Without alarm switch
C1	One inductive alarm switch
C2	Two inductive alarm switches
M1	One micro switch
R1	One reed switch
R2	Two reed switches

Code	Housing protection / Case type / Material
A1	IP65 / Rectangle bolt tight type / Aluminum alloy
A2	IP65 / Round screw tight type / Aluminum alloy
B1	IP65 / Round bayonet ring type / SS316 (only for indicating)
B2	IP65 / Round screw tight type / SS316
C	Explosion proof / Aluminum alloy Class I, Groups B, C & D; Class II, Groups E, F & G; NEMA 4,7,9

Code	Body & wetted parts
A	SS316, standard
B	SS316L
0	Option

Code	Float material
A	SS316
B	SS316L
0	Option

Code	Connection rating
5	JIS 5K
10	JIS 10K
20	JIS 20K
15	ANSI 150#
30	ANSI 300#
60	ANSI 600#
90	ANSI 900#
T	Other:_____

Code	Connection size
4F	½" Flange
6F	¾" Flange
10F	1" Flange
12F	1½" Flange
20F	2" Flange
22F	2½" Flange
30F	3" Flange
40F	4" Flange
50F	5" Flange

Code	Transmitter protection
G	IP65 (General type)
Ix.	Intrinsically Safe (EExiaIICT6), IP65
0	Without transmitter

Code	Fluid
G	Gas
O	Oil
L	Liquid
S	Steam

Code	Range
S	Standard range
	Please directly fill out the flow range in the order code.

Code	Flow Direction
0	LH
5	HL
10	RL
20	LR

BR250S							+					

NOTE:
1. Custom-made flow range and flange size upon request.
2. Please fill in the ordering information and service condition, and fax this sheet along with your inquiry to 886-7-8225588.

Special instruction, if any:

_____

_____

_____

Service Condition:

Fluid name: _____

Sp. Gr. (density): _____

Viscosity: _____

Press.: _____

Temp.: _____

Full scale: _____

WWW.NEW-FLOW.DE | Tel: +49 3682 49099 | Fax: +49 3682 49093 | E-Mail: info@mess-regel.de