FLOW CONSTANT VALVE FOR PURGE METER CVA/CVD



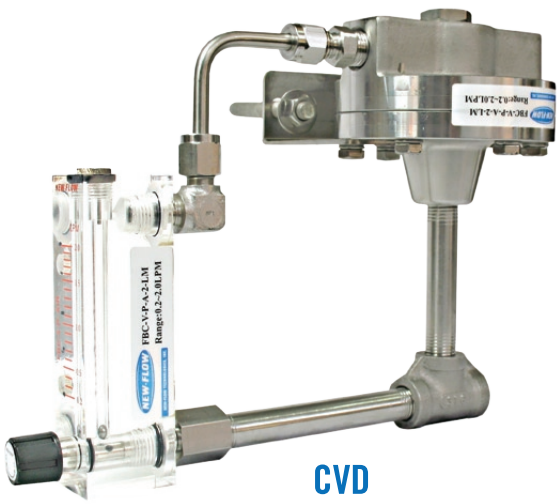

Technical Data

The CVA series is used in where the pressure at the inlet is variable and the pressure at the outlet is constant.
The CVD series is used in where the pressure at the inlet is constant and the pressure at the outlet is vaiable.
Flow Rate:
Liquid: Maximum 200 cc/min water, bigger than it on request
Gas: Maximum 30 NL/Min air, bigger than it on request
Process Connection: ¼"NPT female, others on request
Temperature Limit: 120°C max.
Pressure Limit: 10 kg/cm², bigger than it on request
Controllable Differential Pressure: Air minimum 0.02 kg/cm²
Maximum 4 kg/cm², liquid minimum 0.2 kg/cm²
Maximum 4 kg/cm², special range on request
Accuracy: ±5% F.S.
Material: Body and metal parts-316 stainless steel
Membrane-Teflon, option on request

Dimension

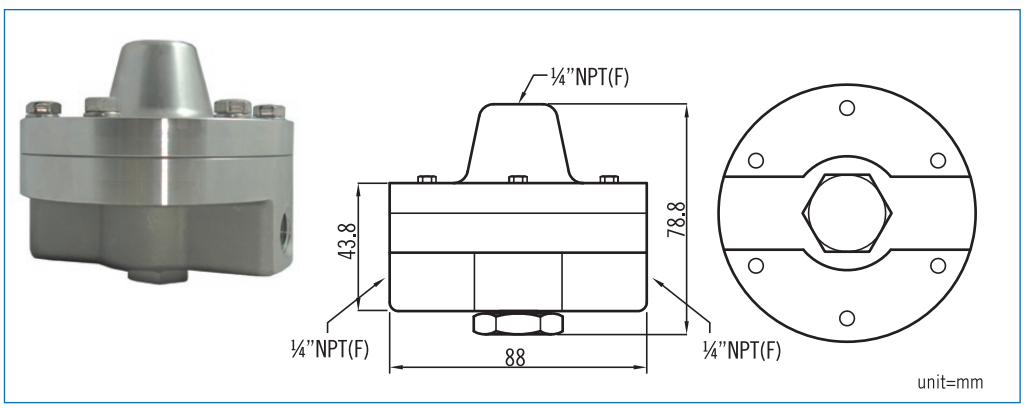

Installed Drawing

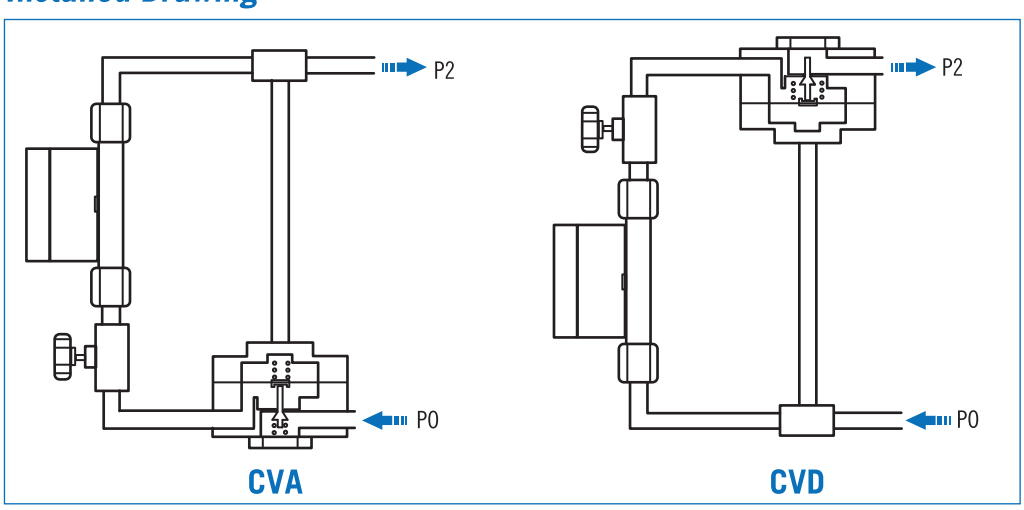

WWW.NEW-FLOW.DE | Tel: +49 3682 49099 | Fax: +49 3682 49093 | E-Mail: info@mess-regel.de

Installed Method

Open Tanks Type Installed Method

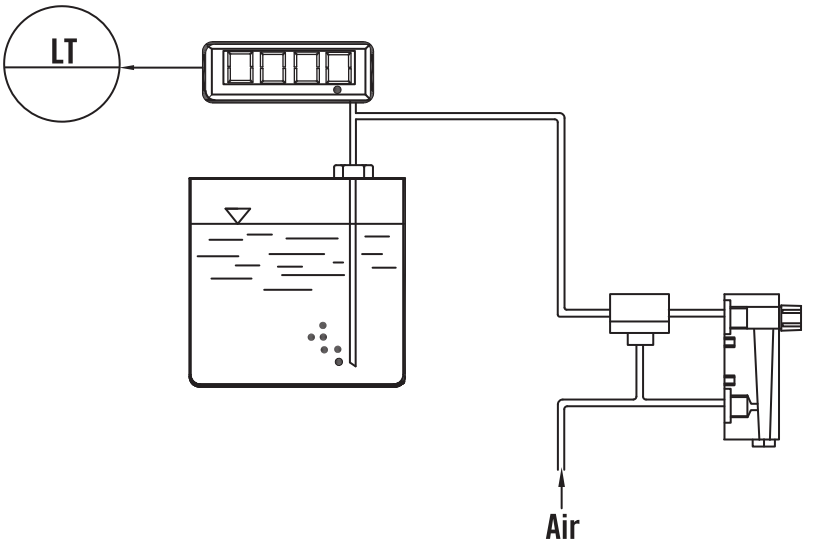

Closed Tanks Type Installed Method

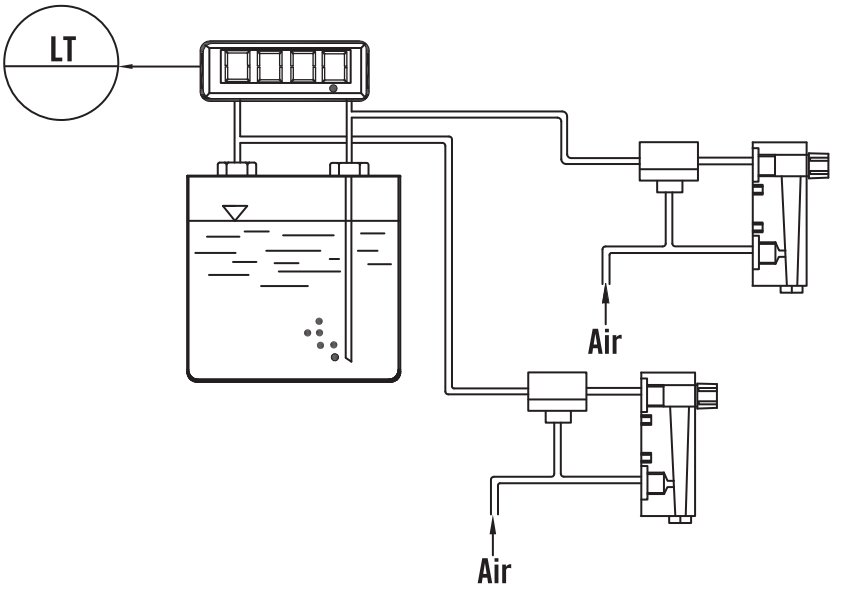

Measuring Density Type Installed Method

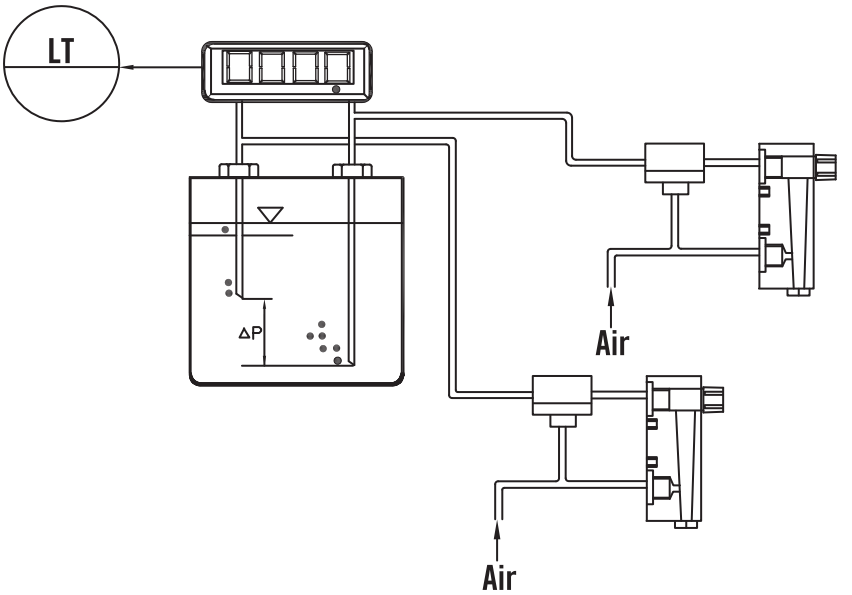

WWW.NEW-FLOW.DE | Tel: +49 3682 49099 | Fax: +49 3682 49093 | E-Mail: info@mess-regel.de

Purge Set W/Panel

Glass Tube Flow Meter– One Set

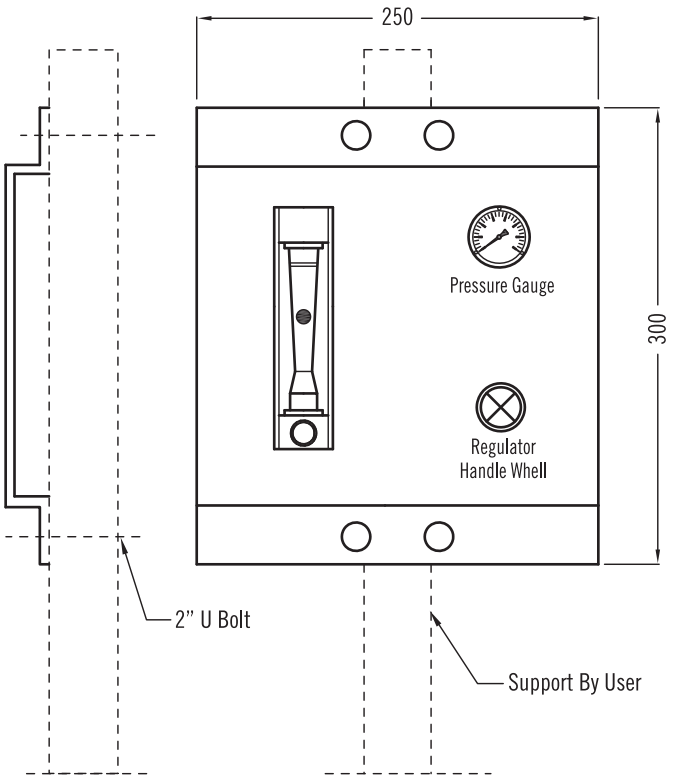

Glass Tube Flow Meter– Two Set

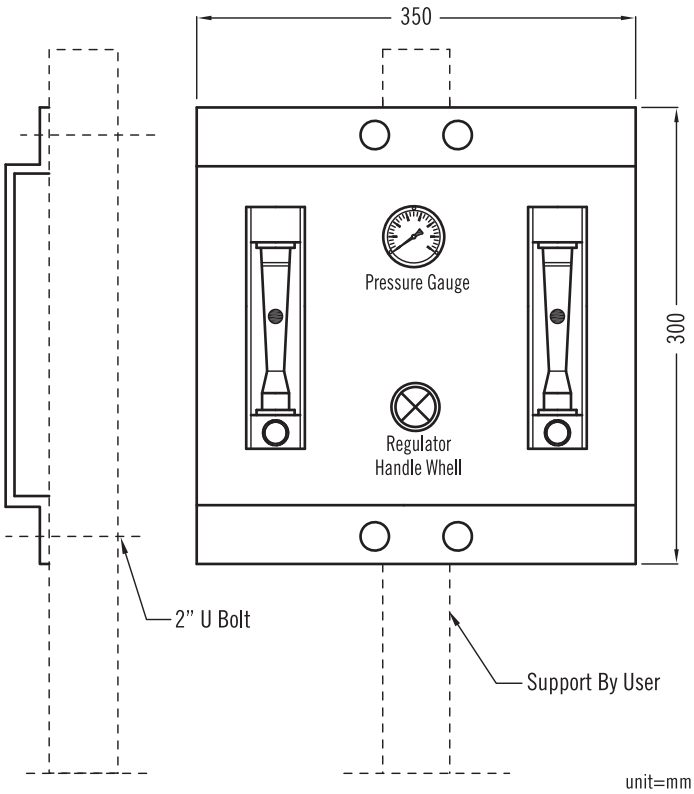

unit=mm

Metal Tube Flow Meter– One Set

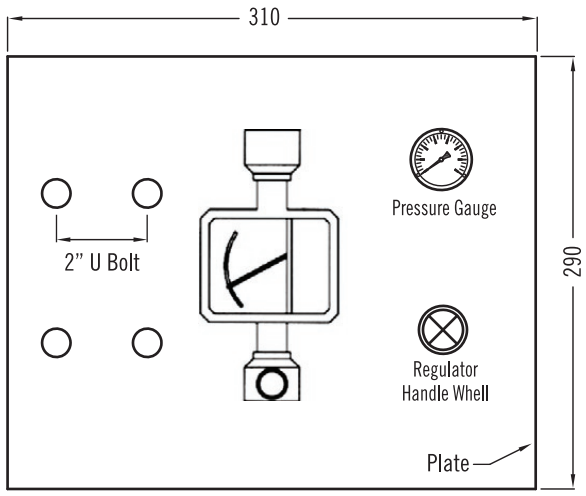

Metal Tube Flow Meter– Two Set

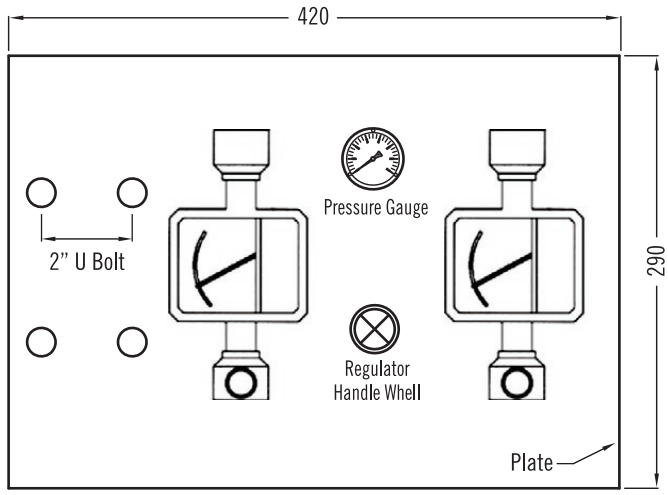

unit=mm

NOTE
Option: Other style available.

WWW.NEW-FLOW.DE | Tel: +49 3682 49099 | Fax: +49 3682 49093 | E-Mail: info@mess-regel.de