CONVENTIONAL TYPE THERMOCOUPLE ASSEMBLIES

NEW-FLOW conventional type thermocouple is high precision and reliability measuring temperature sensor.



Technical Data

Head housing: IP65 & IP67. Explosion proof available.
R type available.
Insulator Dial Size: Ø4.0~Ø6.0 mm on request
Insulated material: Ceramic
Protection tube material: Metal, Non-metal. Refer to protection tube table.
Working temperature limited: -200~1700°C
according to applicable standards table.
Measuring junction type: Grounded type, Ungrounded type, Ungrounded separated type

Thermocouple Model

Protection Well: Metal

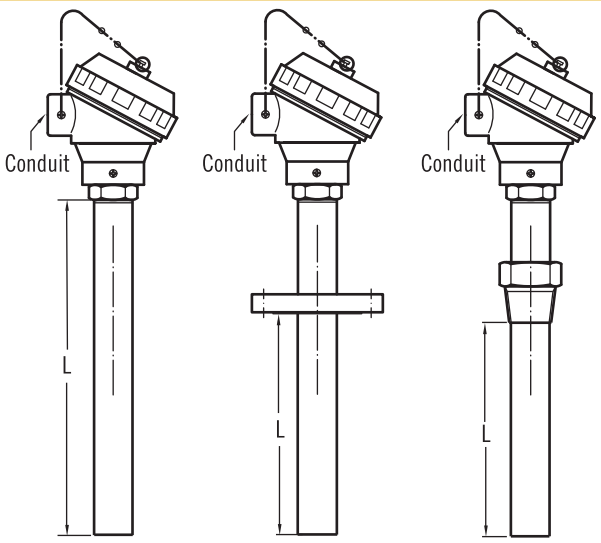

(A-1) CDC Type (A-2) CFC Type (A-3) CTC Type

Protection Well: Non-Metal

* Ceramic Tube Style Type

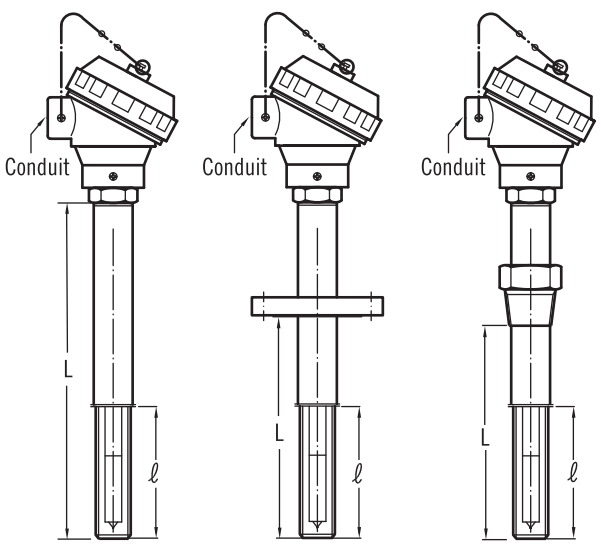

(B-1) CDC Type (B-2) CFC Type (B-3) CTC Type

Applicable Standards Table

Standard / Symbol	IEC 584-2-1982 / JIS C1605-1995			ASTM E230-1996		
	Class	Temp. Range(°C)	Tolerance	Class	Temp. Range(°C)	Tolerance
B	2	600~1700	±0.0025|t|	STD.	870~1700	±0.5%
	3	600~800	±4			
		800~1700	±0.005|t|			
R & S	1	0~1100	±1	STD.	0~1450	±1.5 or ±0.25%
	2	0~600	±1.5	SP.		±0.6 or ±0.1%
		600~1600	±0.0025|t|			
N	1	-40~+375	±1.5	STD.	0~1260	±2.2 or ±0.75%
		+375~+1000	±0.004|t|			
	2	-40~+133	±2.5	SP.		±1.1 or ±0.4%
		+333~+1200	±0.0075|t|			
	3	-167~40	±2.5	STD.	-200~0	±2.2 or ±2%
		-200~-167	±0.015|t|			

*|t| : display temperature (°C) on request range.

Wire Element With Ceramic Insulator

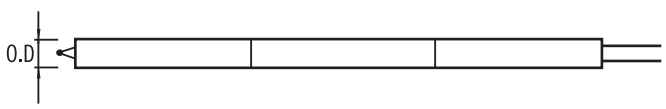

O.D	Ø4.0	Ø6.0

WWW.NEW-FLOW.DE | Tel: +49 3682 49099 | Fax: +49 3682 49093 | E-Mail: info@mess-regel.de

Thermowell Tube Table

A. Metal

Material	Max. Temp. Limit (°C)		Symbol	Dimension (∅mm)		Max Length (mm)
	Nor.	Max.		O.D	I.D	
SS316	850	950	C	10	7	2000
				12	9	
				15	11	3950
				21.7	15.7	
SS316L	850	950	CL	10	7	2000
				12	9	
				15	11	3950
				21.7	16.1	
SS304	850	950	A	10	7	2000
				12	9	
				15	11	3950
				21.7	15.7	
SS310S	1050	1100	D	15	7	3950
				21.7	16.1	
				27.2	21.4	
Titanium	250	500	T	15	11	3950
				17.3	12.7	
				21.7	16.1	
				27.2	21.6	
Kanthal AF	1100	1300	K	22	16	3950
NCF600 (Inconel 600)	1000	1250	B	22	16	3950
Sandvik P4	1050	1100	P	21.7	16.1	3950
				21.3	16	
				26.9	21.6	
UMCo 50	1150	1200	U	22	16	3950
				27	21	

B. Non-Metal

Material	Max. Temp. Limit (°C)		Symbol	Dimension (∅mm)		Max Length (mm)
	Nor.	Max.		O.D	I.D	
Silicon Carbide	1650	–	GK	20	12	1000
				by25	17	
				30	20	
				35	25	
				40	25	
				45	30	
				50	30	
				60	40	
Alumina	1600	1700	P1	8	5	1000
				10	6	
				13	9	
				15	11	
				17	13	
				20	15	
High Alumina	1700	1900	P0	8	5	1000
				10	6	
				13	9	
				15	11	
				20	16	
				15	6	
				20	10	

Working Temperature Limits In Wire Of Element Dimension Size

SINGLE ELEMENT

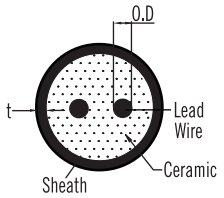

DOUBLE ELEMENT

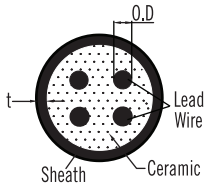

Thermocouple Type	Wire Dia.		Working Temperature Limit (°C)		Available Dimensions Protection Tube (∅ mm)	
	Symbol	O.D.	Nor.	Max.	Metal Tube	Non-Metal Tube
B	L	0.5	1500	1700	—	15x11
R	L	0.5	1400	1600	—	15x11
S	L	0.5	1400	1600	—	15x11
N	A	1.0	950	1000	21.7x16.1	—
	B	1.6	1050	1100	21.7x16.1	—
	C	2.3	1100	1150	15x11	—
	D	3.2	1200	1250	12x9	—

Measuring Junction Type



(A) Grounded Type



(B) Ungrounded Type



(C) Ungrounded Separated Type

(A) It is not suitable for using in location such as electromagnetic induction interfered by radio frequency.
(B) It has response slower than grounded. But ensured a long life, it is available for measuring in various location.
(C) It could be used in two control loop separately.

WWW.NEW-FLOW.DE | Tel: +49 3682 49099 | Fax: +49 3682 49093 | E-Mail: info@mess-regel.de

Material Of Thermocouple Element

Type		Feature
Symbol	Composition	
B	Pt-30Rh/Pt-6Rh	**(+) Positive Wire:** Platinum-rhodium alloy –30% rhodium and 70% platinum. **(-) Negative Wire:** Platinum-rhodium alloy –6% rhodium and 94% platinum.
R	Pt-13Rh/Pt	**(+) Positive Wire:** Platinum-rhodium alloy –13% rhodium and 87% platinum. **(-) Negative Wire:** PurePlatinum
S	Pt-10Rh/Pt	**(+) Positive Wire:** Platinum-rhodium alloy –10% rhodium and 90% platinum. **(-) Negative Wire:** PurePlatinum
N	Ni-Cr-Si/Ni-Si	**(+) Positive Wire:** Nicrosil **(-) Negative Wire:** Nisil

Ordering Information

Model	CDC	CFC	CTC

Code	**Head Housing Protection**
	IP65 & IP67 (1) HN (2) HP (3) HD (4) HI (5) HB
	Explosion proof (6) XDS (7) XDA (8) S1 (9) S2

Code	**Conduit Connection**				
A	1/2"NPT Female	B	3/4"NPT Female	0	option

Code	**Element Type**				
	B	R	S	N	

Code	**Element No**		
S	Single	D	Double

Code	**Wire Element Dimensions "O.D" mm**
	(1) 0.5 (2) 1.0 (3) 1.6 (4) 2.3 (5) 3.2 (0) option

Code	**Measuring Junction**
G	Grounded type
U	Ungrounded type
US	Ungrounded separated type

Code	**Element Class**
	(1) Class 1 (2) Class 2 (3) Class 3

Code	**Insulated Ceramic Dimensions**
	(1) ∅4.0 (2) ∅6.0

Code	**Thermowell Material**
	Metal (1)SS316 (2)SS316L (3)SS304 (4)SS310S (5)Titanium (6)Kanthal AF (7)NCF600 (8)SUH446 (9)Sandvik P4 (10)UMCo50
	Non-Metal (1)Silicon carbide (2)Alumina (3)High alumina

Code	**Thermowell Size "O.D"**
	Please refer to thermowell table directly fill in requesting "OD".

Code	**Thermowell "L" Insertion Length**
	Please directly fill in requesting length (mm).

												Complete Ordering Code

WWW.NEW-FLOW.DE | Tel: +49 3682 49099 | Fax: +49 3682 49093 | E-Mail: info@mess-regel.de