ACRYLIC PLASTIC FLOW METER

With Alarm Switch DS SERIES

with needle valve type
without needle valve type

Technical Data

Service: Water, Air
Wetted parts material: Body-Acrylic Plastic O-ring-NBR, Viton Float-magnet coating with Nickel
Connecting material: SS316
Connecting size: 1/4", 3/8" NPT & 3/8"PT female available
Mounting: vertical position
Temperature & pressure limits: 150 psig(10bar) @ 100°F(38°C)
Temperature limit: -24°C~+54°C
Accuracy: ±5% full scale
Alarm switch: one or two setting points, form A N.O. type bistable reed switch
Switch rating: AC 125V 0.5A / DC 100V 10W / Max. DC 250V<1mA
Weight: 0.55~0.6 kg
(Contact setting point should be within 10% to 80% of FS)



Dimensions

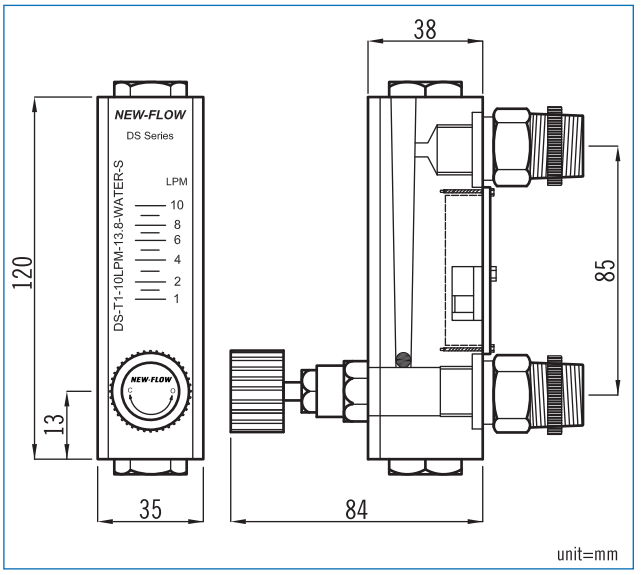

Flow Direction Types



Ordering Information

DS	Code	Needle Valve		
	1	With	2	Without

Code	Flow Range
A-1	Water (LPH - Litter per Hour)
	(1) 2~180 **(2)** 25~250 **(3)** 30~300 **(4)** 40~500
A-2	Water (LPM - Litter per Minute)
	(5) 0.35~3 **(6)** 0.4~4 **(7)** 0.5~5 **(8)** 0.8~8
B	Air (LPM - Normal Litter per Minute)
	(9) 8~80 **(10)** 10~100 **(11)** 25~250

Code	Alarm Switch
1R	One setting point
2R	Two setting points
0	Wihtout alarm

Code	Process Connection
A	1/4"NPT female
B	3/8"NPT female
C	3/8"PT female

Code	Flow Direction
BT	Bottom to Top

DS					

WWW.NEW-FLOW.DE | Tel: +49 3682 49099 | Fax: +49 3682 49093 | E-Mail: info@mess-regel.de