UNION TYPE DIAPHRAGM SEAL

DT105

DT-105 diaphragm seal is designed to be used in food, beverage industry and pharmaceutical industry. It is easy to assemble with pressure gauges, pressure switches and pressure instruments.



Technical Data

Instrument connection: female thread ¼" to ½" BSP or NPT
Process connection: 1", 1½", 2" (SMS)
25, 32, 40, 50 (DN11851)
Temperature limited: -40~+150℃
Pressure range limited: (for pressure gauge)

Size	1" / 25	1½" / 32, 40	2" / 50
MINIMUM LIMITED (kg/cm²)	0~10	0~6	-1~+1.5
MAXIMUM LIMITED (kg/cm²)	0~60	0~40	0~16

Material: body-SS316(standard)
Option: SS316L,Hastelloy C276, and others on request
Membrane: SS316L(standard)
Option: Hastelloy C276, tantalum and others on request

Dimensions

Item	Description of Parts
a	Body housing
b	Filling port
c	Membrane
d	Instrument connection
e	Chemical seal with union nut or hexagon nut

NOTE
Performance Technical Data are effective with date of issue and are subject to change without prior notice.

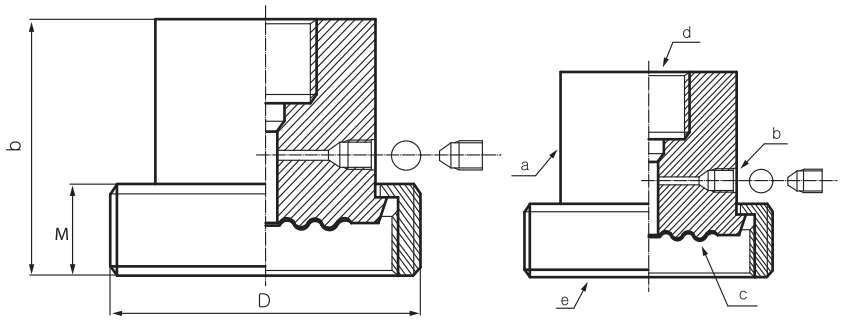

unit=mm

Dimensional Data

SMS	D	b	M
1"	51	56	20
1½"	74	56	25
2"	84	62	26

DN	D	b	M
25	63	54	21
32	70	54	21
40	78	54	21
50	92	48	22

Ordering Information

DT105	Code	Instrument Connection (Female)
		(A) ¼"BSP (B) ¼"NPT (C) ⅜"BSP (D) ⅜"NPT (E) ½"BSP (F) ½"NPT
	Code	Process connection
		(1)1"SMS (2) 1½"SMS (3) 2"SMS (4) DN25 (5) DN32 (6) DN40 (7) DN50
	Code	Body material
		(S) SS316 (standard) (O) Option
	Code	Membrane material
		(1) SS316L (2) Hastelloy C276 (3) Tantalum (4) Option
	Code	Union Nut
		(1) Round Nut (2) Hex. Nut (3) without

DT105						Complete ordering code

WWW.NEW-FLOW.DE | Tel: +49 3682 49099 | Fax: +49 3682 49093 | E-Mail: info@mess-regel.de