THREAD TYPE DIAPHRAGM SEAL

DT110



DT110 diaphragm seal is designed to be used in highly viscous process media such as pulp, paper, waste water treatment, and plastic/chemical process industries. DT110 is easy to assemble with pressure gauges, pressure switches, and pressure instruments.

Technical Data

Instrument connection: female thread ¼" to ½" BSP or NPT
Membrane size: Ø45, Ø55, Ø75 available
Process connection: ¼" to ½" Thread BSP or NPT
Temperature limited: -40~+150℃ cooling element or capillary line up to 350℃
Pressure range limited:
Maximum up to 40 kg/cm²
Minimum: -760 mmHg~0 (Ø75 Membrane)
-1~1.5 kg/cm² (Ø55 Membrane)
0~10 kg/cm² (Ø45 Membrane)
Material: Upper & Lower housing- SS316 (standard), others on request
Membrane: SS316L (standard); Options– Hastelloy C276, tantalum, and others on request.

Dimensions

Item	Description of Parts
a	Upper housing
b	Filing port
c	Membrane
d	Instrument connection
e	Filling port
f	Process connection
g	Screw bolt

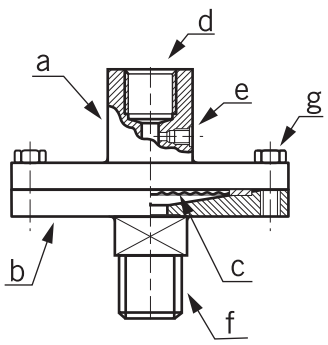

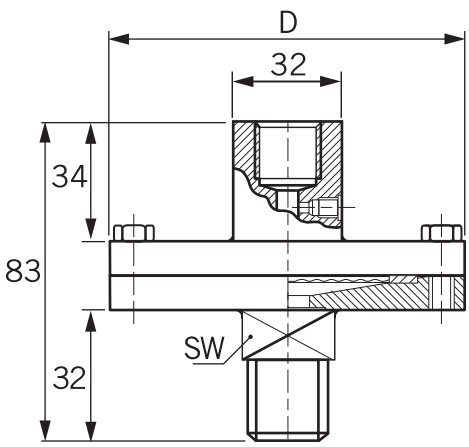

unit=mm

Membrane size			
Ø	45	55	75
D	68.5	80	100

Ordering Information

DT110	Code	Instrument Connection (Female)
		(A) ¼"BSP (B) ¼"NPT (C) ⅜"BSP (D) ⅜"NPT (E) ½"BSP (F) ½"NPT
	Code	Membrane size
		(A) Ø45 (B) Ø55 (C) Ø75
	Code	Process connection (Male)
		(1) ¼" BSP (2) ¼" NPT (3) ⅜"BSP (4) ⅜"NPT (5) ½"BSP (6) ½"NPT (7) Option
	Code	Thread
		(M) Male (F) Female
	Code	Upper housing material
		(S) SS316(standard) (O) Option
	Code	Lower housing material
		(S) SS316(standard) (O) Option
	Code	Membrane material
		(1) SS316L (2) Hastelloy C276 (3) Tantalum (4) Option

DT110								Complete ordering code

WWW.NEW-FLOW.DE | Tel: +49 3682 49099 | Fax: +49 3682 49093 | E-Mail: info@mess-regel.de