FLANGE TYPE DIAPHRAGM SEAL

DT116 –Teflon Lining on Wetted Parts Available



DT116 diaphragm seal is designed to be used in highly viscous process media such as pulp, paper, waste water treatment, and plastic/ chemical process industries. DT116 is easy to assemble with pressure gauges, pressure switches, and pressure instruments.

Technical Data

Instrument connection: female thread ¼" to ½" BSP or NPT
Membrane size: Ø55, Ø75 available
Process connection: ½" to 3" Flange, JIS, ANSI, DIN available
Temperature limited: -40~+150℃ cooling element or capillary line up to 350℃
Pressure range limited: Maximum up to 40 kg/cm², Teflon lining type up to 25kg/cm²
Minimum: -760 mmHg~0 (Ø75 Membrane); -1~15 kg/cm² (Ø55 Membrane)
Material: Upper & Lower housing-SS316 (standard), others on request
Wetted parts Teflon lining available on request
Membrane: SS316L (standard); Options– Hastelloy C276, SS316L with teflon lining, tantalum, and others on request.

Dimensions

Item	Description of Parts
a	Upper housing
b	Lower housing
c	Membrane
d	Instrument connection
e	Filling port
f	Process connection
g	Screw bolt
h	Teflon lining

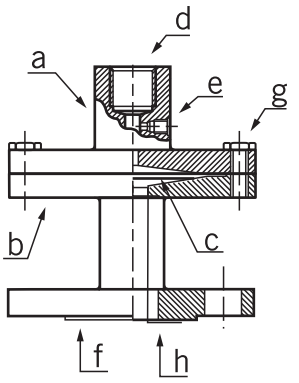

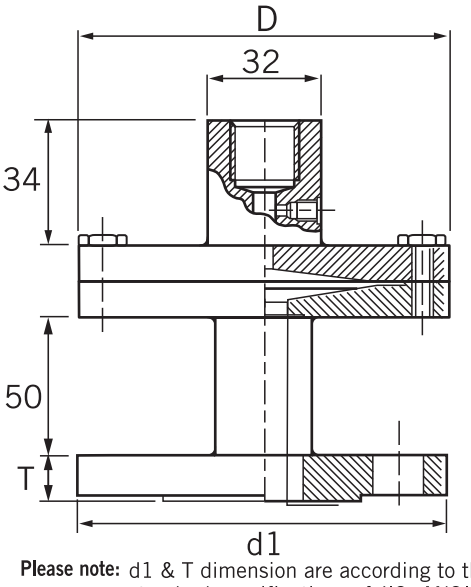

Membrane size		
Ø	55	75
D	80	100

unit=mm

NOTE
Performance Technical Data are effective with date of issue and are subject to change without prior notice.

Please note: d1 & T dimension are according to the standard specifications of JIS, ANSI and DIN.

Ordering Information

DT116	Code	Instrument Connection (Female)
		(A) ¼"BSP (B) ¼"NPT (C) ⅜"BSP (D) ⅜"NPT (E) ½"BSP (F) ½"NPT
	Code	Membrane size
		(A) Ø55 (B) Ø75
	Code	Process connection
		(1) ½" (2) ¾" (3) 1" (4) 1½" (5) 2" (6) 3" (7) Option
	Code	Flange rating
		(1) 150# (2) 300# (3) PN16 (4) PN25 (5) JIS 10K (6) JIS 20K (7) Option
	Code	Upper housing material
		(S) SS316 (standard) (O) Option
	Code	Lower housing material
		(S) SS316 (O) Option (T) SS316 +Teflon lining (Only can up to 1" size.)
	Code	Membrane material
		(1) SS316L (2) Hastelloy C276 (3) Tantalum (4) SS316+Teflon lining (5) Option

DT116								Complete ordering code

WWW.NEW-FLOW.DE | Tel: +49 3682 49099 | Fax: +49 3682 49093 | E-Mail: info@mess-regel.de