PLASTIC FLANGE TYPE DIAPHRAGM SEAL
DT118



Application

DT118 diaphragm seal is made with material including, special plastic to provide to against the acid fluid for application in customers device. Its eaasy to assemble with pressure gauges, pressure switches and pressure tranducers.

Technical Data

Instrument connection: Female thread ¼" to ½" BSP or NPT
Membrane size: Ø55, Ø75
Process connection: ½" to 2" Flange type, JIS, ANSI, DIN available
Measurement range: -760mmHg ~ 0 ~ 10 kg/cm² (Ø75 Membrane)
0 ~ 25 kg/cm² (Ø55 Membrane)
Max. temperature: Up to 120°C
Material: Upper housing - SS316 (standard); Low housing - P.V.C, P.P, PVDF, Teflon available
Membrane material: SS316L+Teflon lining (standard); Options - Hastelloy C276, Tittanium, Tantalum and others on requset.

Dimensions

Item	Description of Parts
a	Upper housing
b	Lower housing
c	Membrane
d	Instrument connection
e	Filling port
f	Supporting ring
g	Screw bolt
h	Flange

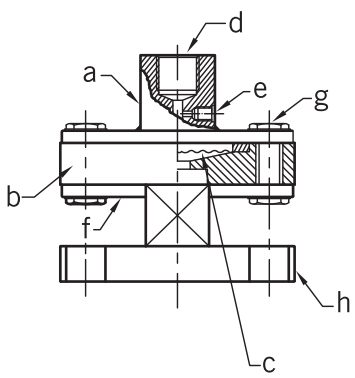

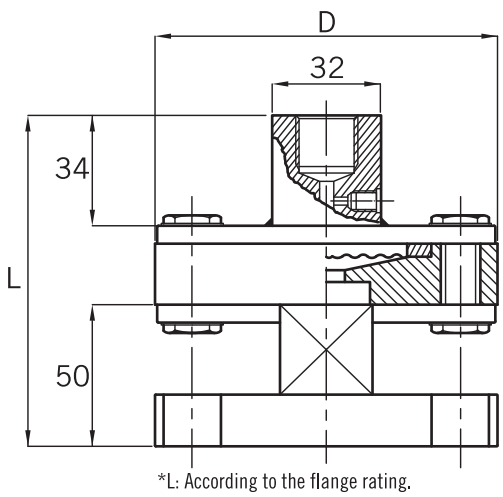

*L: According to the flange rating.

Membrane size		
Ø	55	75
D	80	100

Ordering Information

DT118	Code	Instrument Connection Size (Female)
		(A) ¼"BSP (B) ¼"NPT (C) ⅜"BSP (D) ⅜"NPT (E) ½"BSP (F) ½"NPT
	Code	Membrane Size
		(A) ø55 (B) ø75
	Code	Upper Housing Material
		(S) SS316 (Standard) (O) Option
	Code	Lower Housing Material
		(V) PVC (P) P.P (T) Teflon (PV) PVDF
	Code	Membrane Material
		(H) Hastelloy C (Ti) Titanium (Ta) Tantalum (Tf) SS316 + Teflon lining (O) Option
	Code	Process Connection Size
		(A) ½" (B) ¾" (C) 1" (D) 1½" (E) 2" (O) Option
	Code	Process Connection Rating
		(A) JIS 10K (B) ANSI 150# (C) PN16 (O) Option

DT118								complete ordering code

WWW.NEW-FLOW.DE | Tel: +49 3682 49099 | Fax: +49 3682 49093 | E-Mail: info@mess-regel.de