LAP JOINT TYPE DIAPHRAGM SEAL

DT121

DT121 diaphragm seal is designed to be used in highly viscous process media such as pulp, paper, waste treatment, and plastic/chemical process industries. DT121 is easy to assemble with pressure gauges, pressure switches, and pressure instruments.



Technical Data

Instrument connection: female thread ½" BSP or NPT
Membrane size: Ø45
Process connection: as drawing
Temperature limited: -40~+150°C cooling element or capillary line up to 350°C
Pressure range limited:
Ø45 Membrane: Maximum up to 40 kg/cm²
Minimum -1~5 kg/cm², 0~6 kg/cm²
Housing material: SS316 (standard); others on request
Membrane: SS316L (standard); Options-Hastelloy C276, Tantalum, and others on request.

Dimensions-mm

S–Standard Type

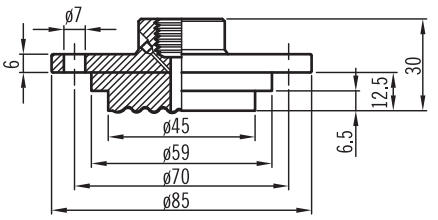

LB–With L-Bow 90°

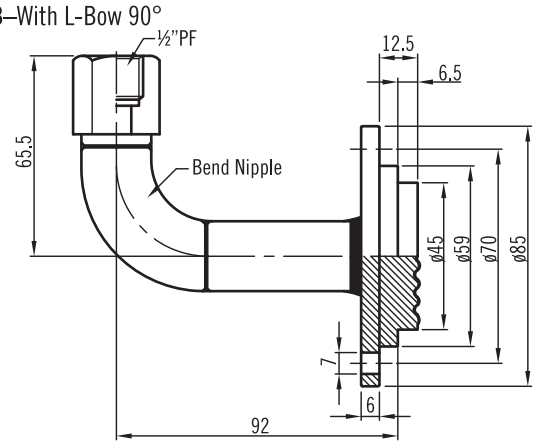

LBS–With L-Bow 90° and Damper (spring)

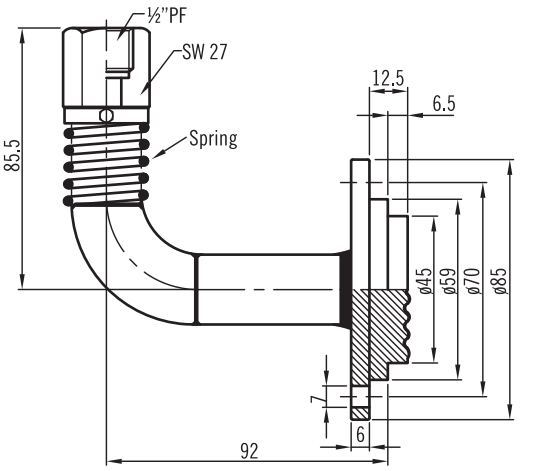

Parts List

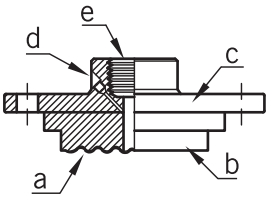

Item	Description of Parts
a	Mambrane
b	Insert Body
c	Rotaling Flange
d	Filling Port
e	Instrument Connection

Ordering Information

DT121	Code	Type
	S	Standard type
	LB	With L-Blow 90° type
	LBS	With L-Blow 90° and damper (spring)

Code	Instrument Connection (Female)
	(A) ½"BSP (B) ½"NPT

Code	Membrane Size
	(A) Ø45

Code	Housing Material
	(S) SS316 (standard)
	(O) Option

Code	Membrane Material
	(1) SS316L
	(2) Hastelloy C276
	(3) Tantalum
	(4) Option

DT121 [ ] [ ] [ ] [ ] [ ] [ ]

WWW.NEW-FLOW.DE | Tel: +49 3682 49099 | Fax: +49 3682 49093 | E-Mail: info@mess-regel.de