FLANGE TYPE DIAPHRAGM SEAL

DT123 –Teflon Lining Type

DT123 diaphragm seal is designed to be used in highly viscous process media such as pulp, paper, waste water treatment, and plastic/ chemical process industries. DT123 is easy to assemble with pressure gauges, pressure switches, and pressure instruments.



Technical Data

Instrument connection: female thread ¼" to ½" BSP or NPT
Membrane size: Ø36, Ø45, Ø75 available
Process connection: ½" to 1" Flange, JIS, ANSI, DIN available
Temperature limited: -40~+150℃
Pressure range limited:
Ø75 Membrane: -760 mmHg~0, Minimum process flange 2" x 150#
Ø45 Membrane: Maximum up to 40 kg/cm²
Minimum -1~5 kg/cm², 0~6 kg/cm²
Minimum process flange ¾" x 150#
Ø36 Membrane: Maximum up to 40 kg/cm²
Minimum 0~10 kg/cm²
Minimum process flange ½" x 150#
Material: Upper & Lower housing- SS316(standard), others on request
Membrane: SS316L+Teflon lining (standard); Options– Hastelloy C276, tantalum, and others on request.

Dimensions

Item	Description of Parts
a	Upper housing
b	Lower housing
c	Membrane
d	Instrument connection
e	Filling port
f	Screw bolt
T	Teflon lining

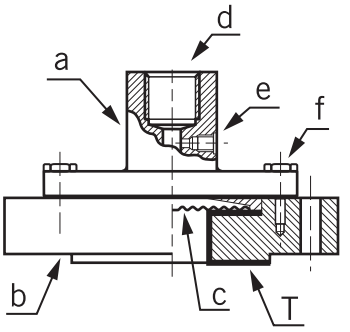

*The flange sizes of 1" to 4" are available upon request.
The dimensions are according to the standard specifications of JIS, ANSI and DIN.

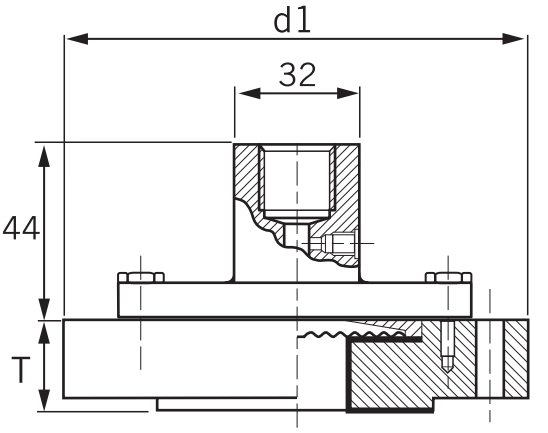

unit=mm

Please note: d1 & T dimension are according to the flange rating and size.

Ordering Information

DT123	Code	Instrument Connection (Female)
		(A) ¼"BSP (B) ¼"NPT (C) ⅜"BSP (D) ⅜"NPT (E) ½"BSP (F) ½"NPT
	Code	Membrane size
		(A) Ø36 (B) Ø45 (C) Ø75
	Code	Process connection
		(1) ½" (2) ¾" (3) 1" (4) 1½" (5) 2" (6) 3" (7) Option
	Code	Flange rating
		(1) 150# (2) 300# (3) PN16 (4) PN25 (5) JIS 10K (6) JIS 20K (7) Option
	Code	Upper housing material
		(S) SS316 (standard) (O) Option
	Code	Lower housing material
		(T) SS316+Teflon lining (O) Option
	Code	Membrane material
		(1) SS316L (2) Hastelloy C276 (3) Tantalum (4) SS316L+Teflon lining (5) Option

DT123								Complete ordering code

WWW.NEW-FLOW.DE | Tel: +49 3682 49099 | Fax: +49 3682 49093 | E-Mail: info@mess-regel.de