FLANGE TYPE DIAPHRAGM SEAL

DT129 PANCAKE TYPE

DT-129 diaphragm seal is designed with capillary line to be used in highly viscous process media such as pulp, paper, waste water treatment and plastics and chemical process industries. It is easy to assemble with pressure gauges, pressure switches, and pressure instruments.



Technical Data

Instrument connection: female thread ¼" to ½" BSP or NPT
Process connection: 2" to 4" flange, JIS, ANSI, DIN, available
Temperature limited: -40~+350℃
Pressure range limited: (measurement type)

Size	2"	3"	4"
MINIMUM LIMITED (kg/cm²)	-1~1.5	-760mmHg~0 -1~0.6 0~2.5	0~0.6
MAXIMUM LIMITED (kg/cm²)	0~60	0~60	0~40

Material: body-SS316(standard), others on request
Membrane: SS316L(standard)
Option: Hastelloy C276, tantalum and others on request

Dimensions

Item	Description of Parts
a	Housing
b	Capillary supporter
c	Membrane
d	Filling port

NOTE
Performance Technical Data are effective with date of issue and are subject to change without prior notice.

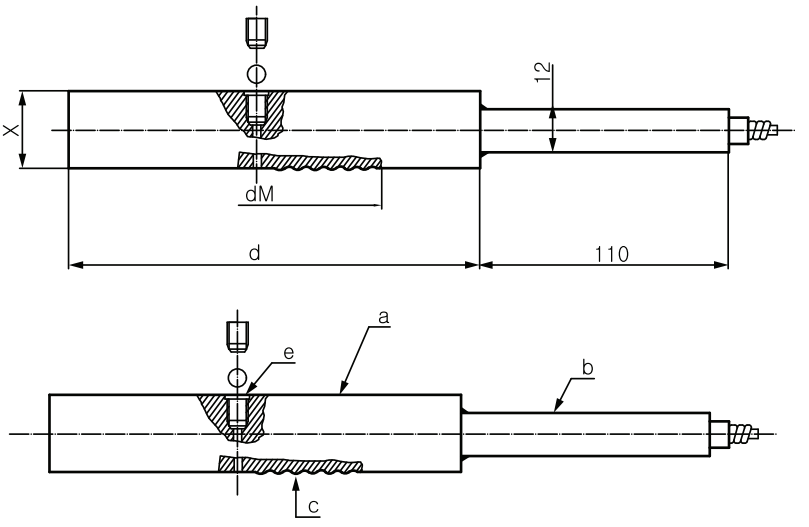

unit=mm

* d,x dimensional size upon request specification.

Ordering Information

DT129	Code	Instrument Connection (Female)
		(A) ¼"BSP (B) ¼"NPT (C) ⅜"BSP (D) ⅜"NPT (E) ½"BSP (F) ½"NPT
	Code	Process connection rating
		(1) 2" (2) 3" (3) 4" (4) Option
	Code	Flange rating
		(1) 150# (2) 300# (3) PN16 (4) PN25 (5) JIS 10K (6) JIS 20K (7) Option
	Code	Housing material
		(S) SS316 (standard) (O) Option
	Code	Membrane material
		(1) SS316L (2) Hastelloy C276 (3) Tantalum (4) Option

DT129						Complete ordering code

WWW.NEW-FLOW.DE | Tel: +49 3682 49099 | Fax: +49 3682 49093 | E-Mail: info@mess-regel.de