FIELD MOUNTED DIGITAL DISPLAY

D-1000 TYPE

Explosion Proof
CLASS I, GROUPS A, B, C & D,
CLASS II, GROUPS E, F & G
NEMA 4X



Technical Data

Enclosure Housing: Aluminum or 316SS
LCD Display: 5 digital **(Only Positive digital)**
Input: Linear 4 to 20mA
Loop Resistance: 500Ω
Accuracy: Analog (4~20mA): ±0.5% of span
Ambient Temperature: -40 to +85°C (-40 to 185°F)
Power Supply: 12 to 35 VDC
Unit: mA, A, mV, V, PH, °F, °C, PSI, Pa, Kpa, Mpa, mbar, bar, %, M, cm...available

Dimensions

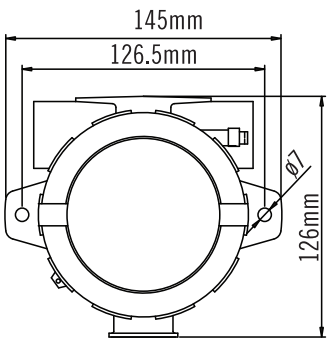

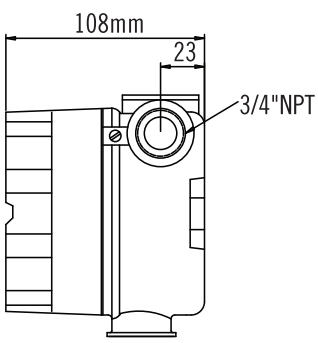

Ordering Information

D-1000	Code	Enclosed Housing
	A	Aluminum
	S	316SS
D-1000				Complete Ordering Code

Wire Drawing

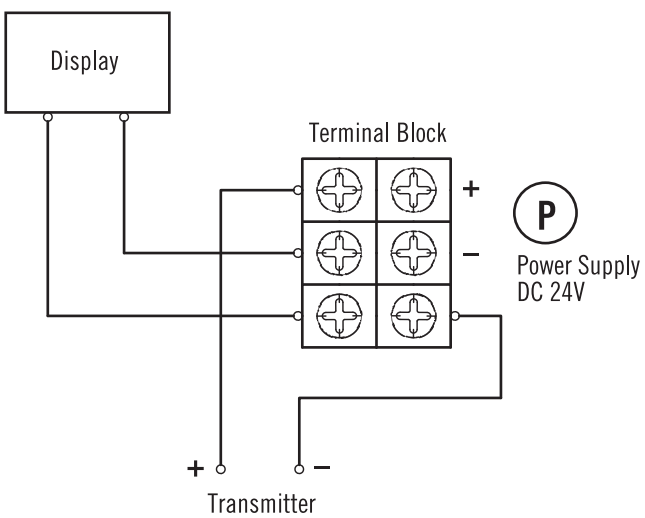

WWW.NEW-FLOW.DE | Tel: +49 3682 49099 | Fax: +49 3682 49093 | E-Mail: info@mess-regel.de