DISPLACER LEVEL SWITCH
300 Three Stage Series

EDW300 – Weather Proof Type
EDX300 – Explosion Proof Type

The NEW-FLOW Displacer Level Switches are made to fit wide range applications such as pump control, waste water level and deep open tank. They are designed for high corrosive resistance and long service life. 300-Series are one stage control and easy to install.



EDX300 EDW300

Technical Data

Easy Installation
Wetted Parts Material: SS316, SS304 available
Housing Material: EDX- Aluminum alloy; EDW- SS316 or C.S with painting
The Suitable S.G.: ≥0.6
Enclosure Housing: EDW–Weather Proof: IP65;
EDX–Explosion Proof: Class I, Groups A,B,C,D; Class II, Groups E,F,G; NEMA 4X
Micro Switch Rating (SPDT & 2SPDT Type): 5A125VAC, 3A250VAC, 3A/30VDC, 0.4A/125VDC, 0.2A/250VDC
Max. Temperature: 250℃
Float Size: ø60mm x 160mm length; other size available upon request

Switch Function

Dry Contact MicroSwitch	1SPDT X3	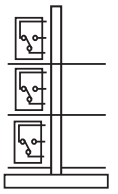
Dry Contact MicroSwitch	2SPDT X3	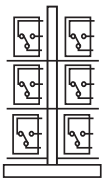

Control

Narrow Differential
Model: 300

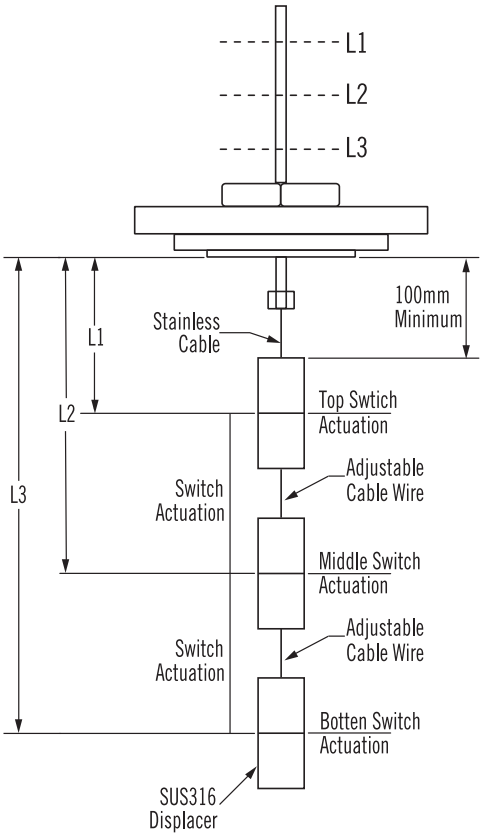

Housing Dimensions

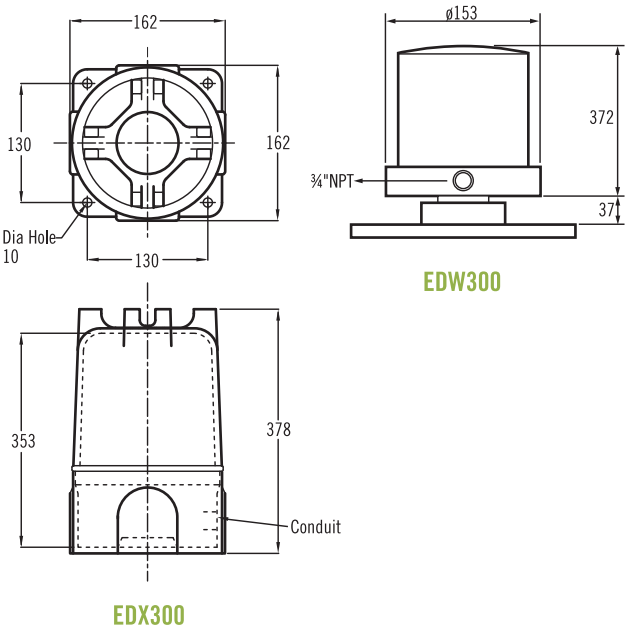

WWW.NEW-FLOW.DE | Tel: +49 3682 49099 | Fax: +49 3682 49093 | E-Mail: info@mess-regel.de

Ordering Information

EDW / EDX	Code	Model
		300 Narrow differential

Code	Housing Material				
A	Aluminum alloy (only for EDX)	B	SS316	C	C.S with painting

Code	Process Connection Size
	(1) 2½" (2) 3" (3) Option

Code	Process Connection Rating
	(A) JIS 10K (B) JIS 20K (C) ANSI 150# (D) ANSI 300# (E) PN16 (F) PN40 (G) Option

Code	Conduit Size
1	¾"NPT

Code	Switch Function	
A	Dry contact Microswitch	1SPDT x 3
B	Option	
C	Dry contact Microswitch	2SPDT x 3
D	Option	

Code	Float Material
	(1) SS316 (2) SS304

Code	Wetted Parts Material
	(A) SS316 (B) SS304

Code	Sp. Gr.
	(A) 1 (B) Other Sp. Gr.

Setting Point
Please fill in the requested length L1= L2= L3=

									L1= L2= L3=	Complete Ordering Code

WWW.NEW-FLOW.DE | Tel: +49 3682 49099 | Fax: +49 3682 49093 | E-Mail: info@mess-regel.de