GENERAL THERMOWELLS

Model : SWP

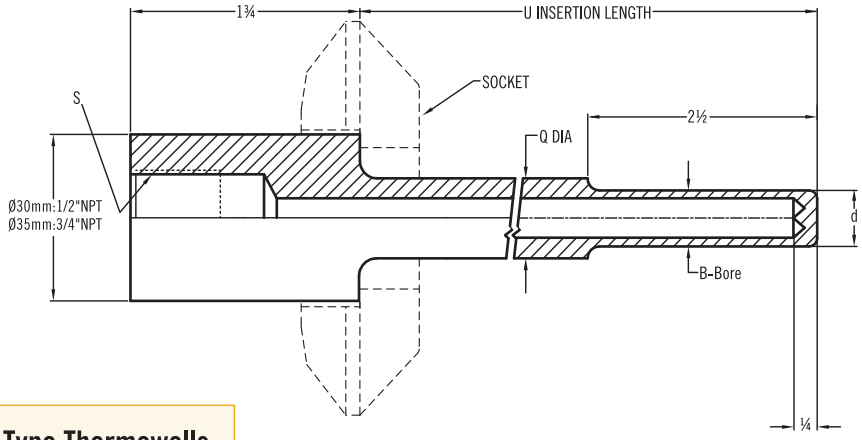

Socket-Weld Type Thermowells

Model : SWS

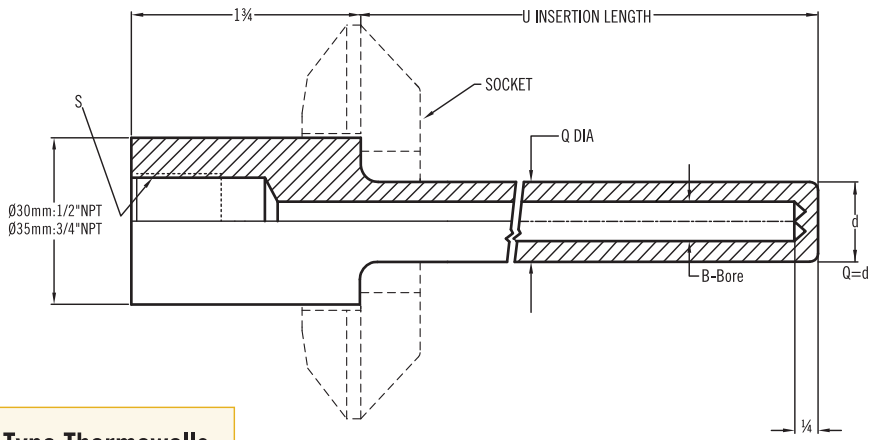

Socket-Weld Type Thermowells

Model : WDN

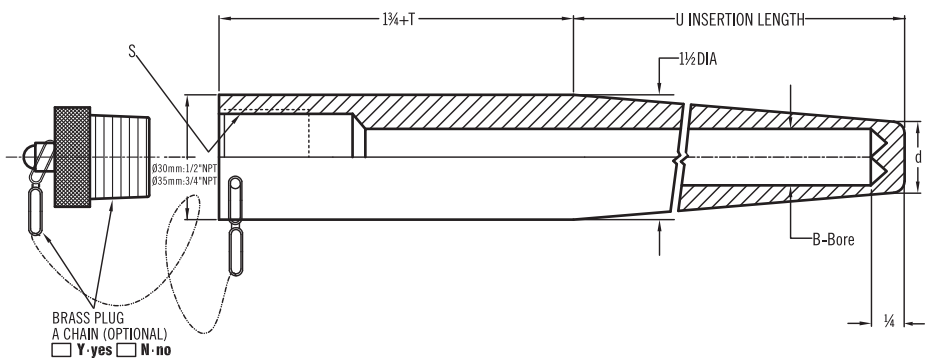

Weld-In Type Thermowells

WWW.NEW-FLOW.DE | Tel: +49 3682 49099 | Fax: +49 3682 49093 | E-Mail: info@mess-regel.de

Model : SCP

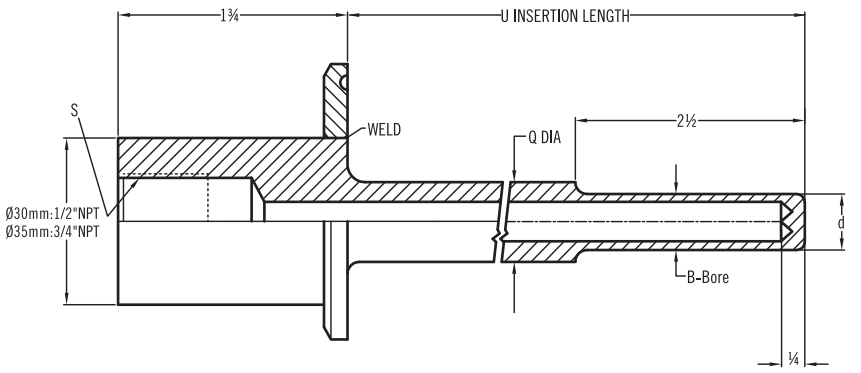

Sanitary Clamp Type Thermowells

Model : SCS

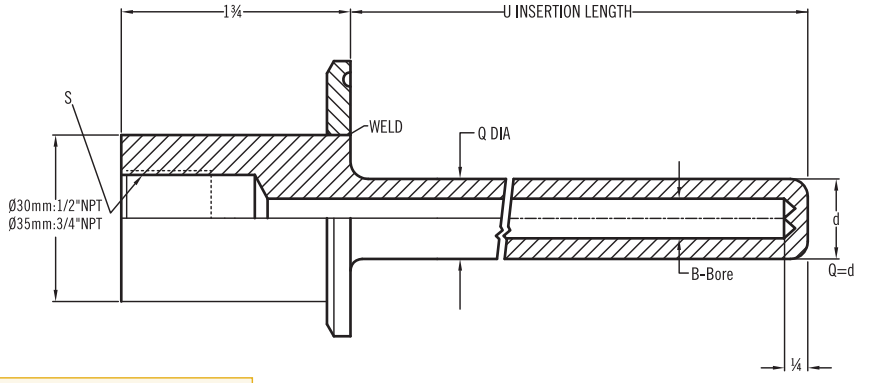

Sanitary Clamp Type Thermowells

Model : JAT

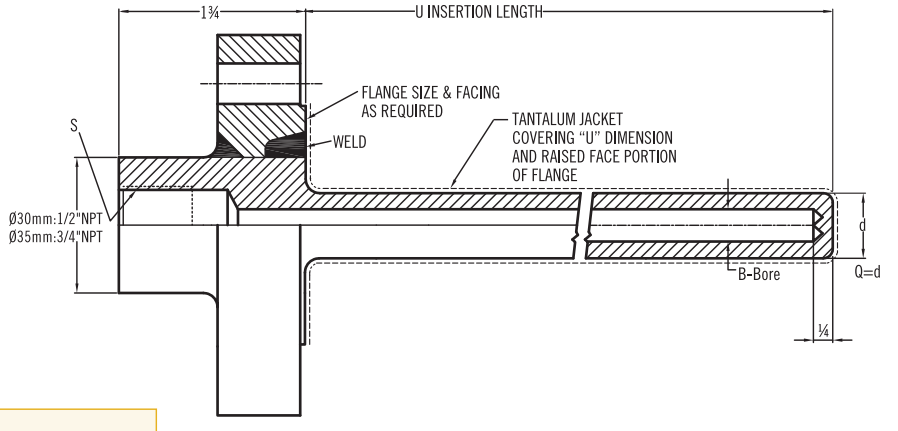

Jacket Type Thermowells

WWW.NEW-FLOW.DE | Tel: +49 3682 49099 | Fax: +49 3682 49093 | E-Mail: info@mess-regel.de

Model : VST

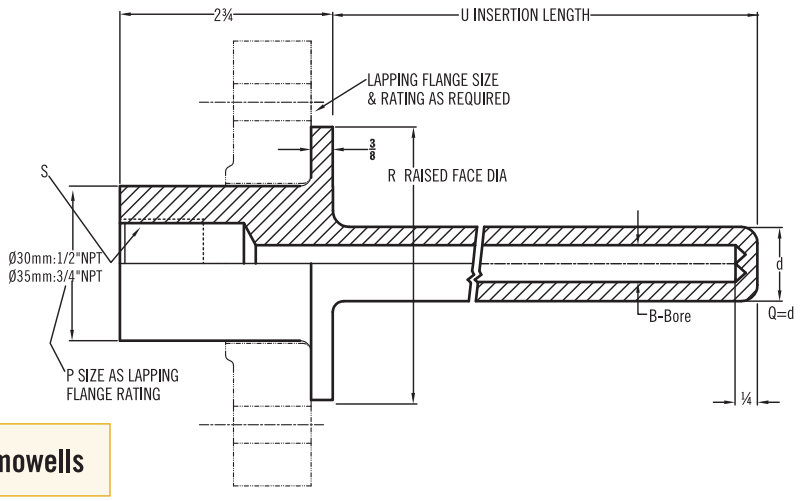

Van Stone Thermowells

Ordering Information

Model	SWP	SWS	WDN	SCP	SCS	JAT	VST

Code	Material	Code	Material
CS	Carbon Steel	MO	Monel
S1	304 Stainless Steel	HC	Hastelloy C276
S2	316 Stainless Steel	Ti	Titaninum
S3	316L Stainless Steel	OP	Option (please indicate material)

Code	Process Connection
	(1) Without (2) With (please indicate size)

Code	"U" Insertion Length
	Please indicate length.

Code	S-Instrument Connection
	(A) ½"NPT Femal (B) ¾"NPT Female (O) option

Code	Lag Length "T"
No	0
Tn	option (please indicate length)

Code	"Q" Diameter		
	Fill in the requested diameter: e.g. 20mm=20Q	0	without Q

Code	"d" Diameter
	Fill in the requested diameter: e.g. 15mm=15d

Code	"B" BORE diameter
	Fill in the requested diameter: e.g. 7mm=7B

Code	Pulg with Chain		
Y	Yes	N	No

										Complete Ordering Code

WWW.NEW-FLOW.DE | Tel: +49 3682 49099 | Fax: +49 3682 49093 | E-Mail: info@mess-regel.de