ROOTS TYPE POSITIVE DISPLACEMENT FLOW METER JA SERIES



JA (Standard type)



JAR (Zero Rest type)



JAH (High Temperature type)



JAT (Pulse Transmitter type)

Principle

The flow meter was designed a special two rotary of Roots for measuring the volume of liquid fluid when the fluid running into the meter pushes two Roos. The driving roots drive a magnet coupling with a direct gear. Then the magnet coupling transmit to the totalizing counts with a gear too. It comes to measure the amount of the fluid which pass to the meter.

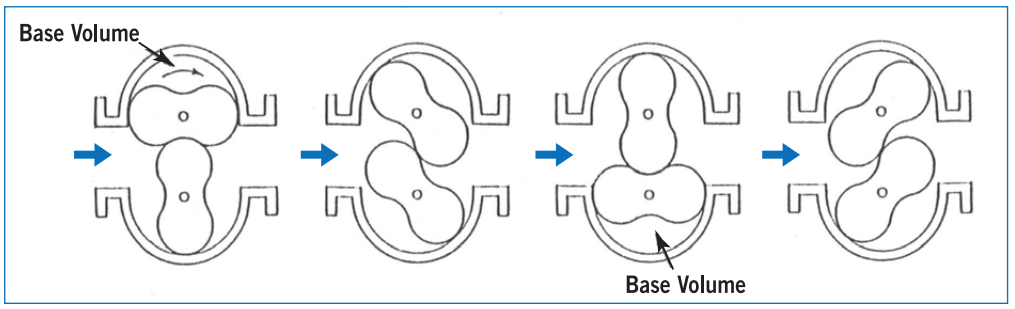

Technical Data

- **Petroleum and Petrochemical:** For process control
- **Chemical:** Process control; shipment of products; intake of materials
- **Pharmaceutical & Paint:** Mixing of various types; quality control; shipment of products
- **Food & Fat:** Mixing of ingredients, tank-to tank transfer, shipment of products
- **Stell making & Shipbuilding:** Measuring fuel consumption of burner, diesel engine fuel

Maximum Working Pressure: 10 kg/cm²
Maximum Working Temperature: 100°C (usual model); only JAH type up to 200°C
Material: Csat Iron, Carbon Steel, SS304, SS316 are available, please refer to the Material List
Totalizer Counter: 6 digital
Zero Rest Counter: 5 digital
Accuracy: ±0.5%
Signal Output (NPN): 100 cc/pluse; 1 liter/pluse; 10 liter/pulse available on request
(If you select JAT pulse transmitter type, please refer to the following table for connection instructoin.)



Signal	Cable Wire	Max. Transfer Distance	Function / Color
Pulse NPN	3 Wires ø0.75mm x 3C	60M	+24/+12 VDC power input..../ Brown Out Signal...../ Black 0V (GND)...../ Blue

WWW.NEW-FLOW.DE | Tel: +49 3682 49099 | Fax: +49 3682 49093 | E-Mail: info@mess-regel.de

Constructoin Diaphragm

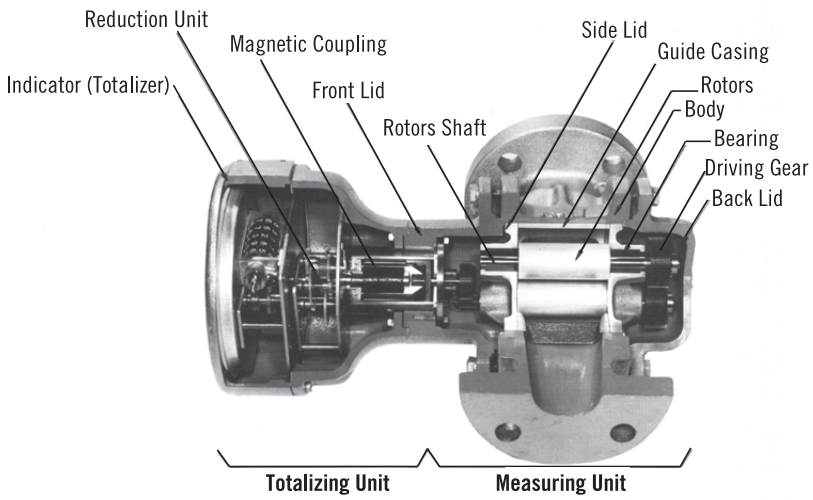

Material List of Measuring Unit





Selection 1: Body Material

Option Item	Body Material
1	Cast Iron
2	Carbon Steel
3	SS304
4	SS316

Selection 2: Inner Material

Option Item	Inner Housing	Roots	Roots Shaft	Driving Gear	Other
A	Bronze	Aluminum	S.S	S.S	SS304
B	Bronze	Bronze	S.S	S.S	SS304
C	Bronze	SS304	SS304	SS304	SS304
D	SS304	SS304	SS304	SS304	SS304
E	SS316	SS316	SS316	SS316	SS316

Pressure Loss Curves

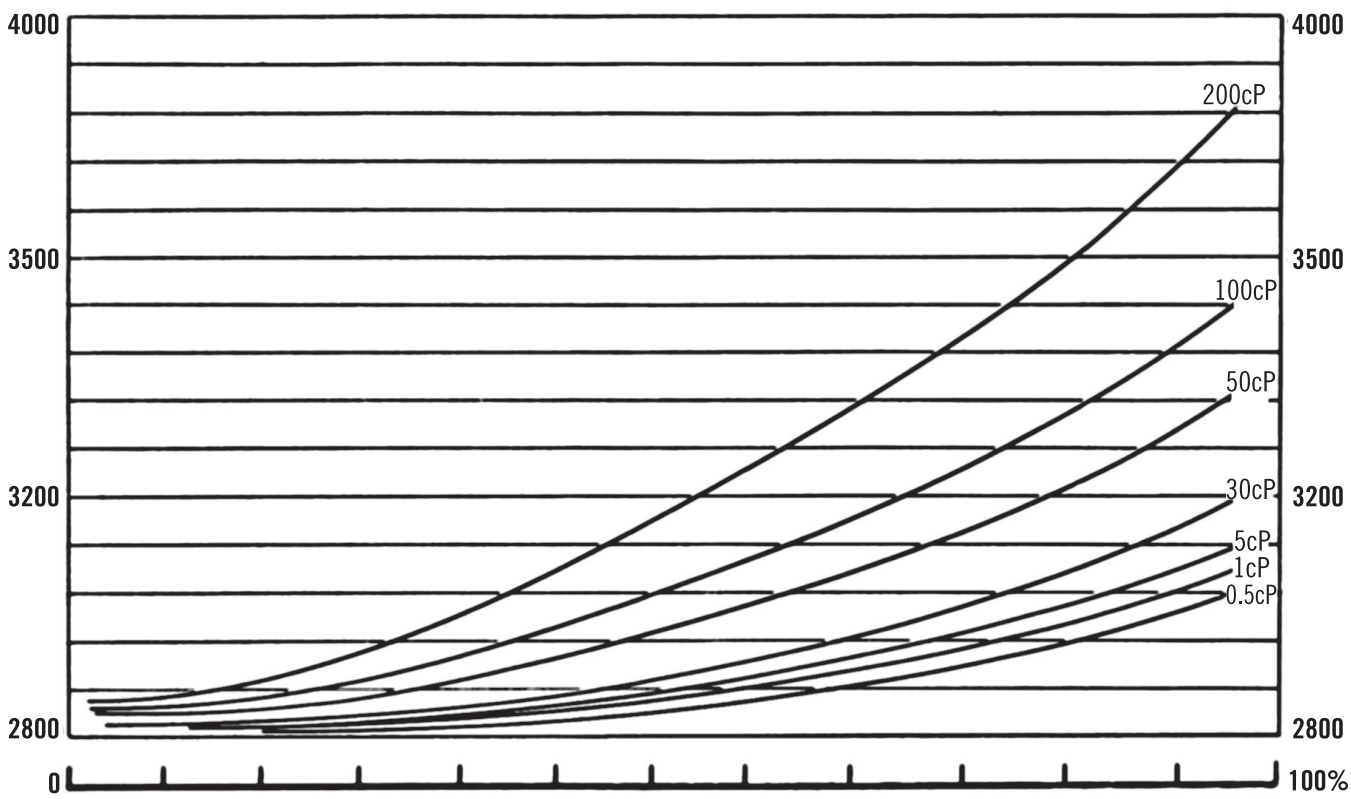

WWW.NEW-FLOW.DE | Tel: +49 3682 49099 | Fax: +49 3682 49093 | E-Mail: info@mess-regel.de

Dimensions

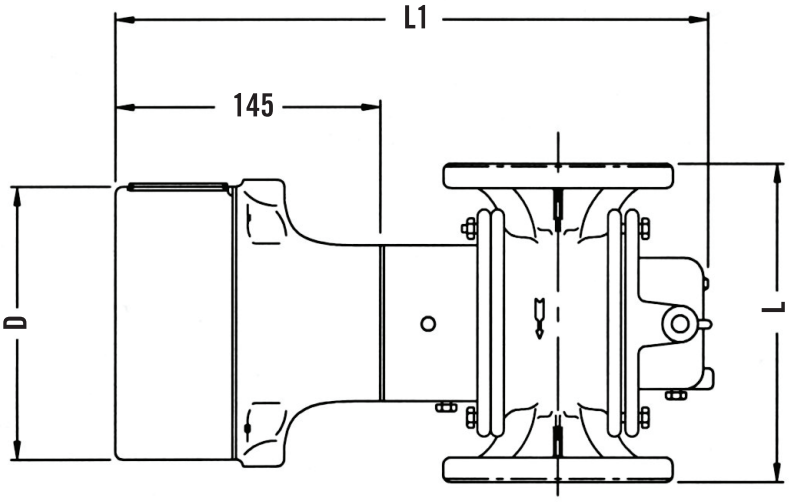

Standard Type
(For JA / JAR Series)

Dimensions for Standard Flow Range-mm

Size	D	L	L1 (Note. 1)
1"JA-25A	180	200	325
1½"JA-40A	180	200	325
2"JA-50A	180	250	375
3"JA-80A	180	325	430

Dimensions for High Flow Range-mm

Size	D	L	L1 (Note. 1)
1½"JA-40A	180	250	375
2"JA-50A	180	325	430

Note. 1
Length "L1" has to add 85mm for JAH (high temperature) type.

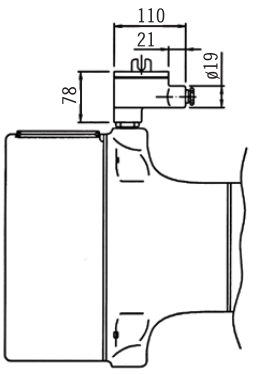

Explosion Proof Type
(For JAT Series)

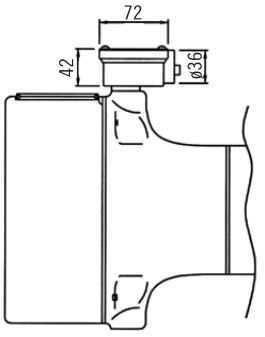

Weather Proof Type
(For JAT Series)

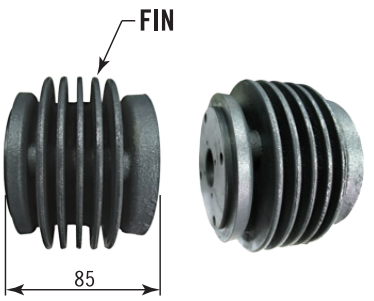

High Temperature type
(For JAH Series)

Function

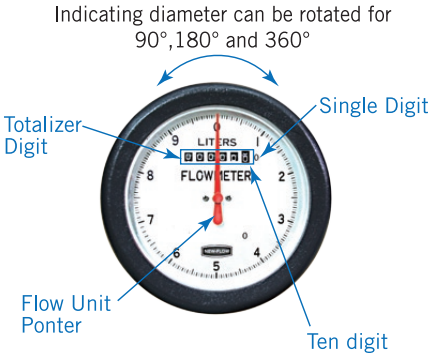

Standard Type
Totalizer Digit & Flow Unit Pointer

– For the single-digit indication:
When the flow meter starts using, the flow unit pointer will be running clockwise from "0", if the flow unit pointer has pointed to 3, it meas the flow rate is 3 Liter.

– For the ten-digit indication:
If the flow unit pointer has passed the scale "0,1,2.. 9 to 0" by running clockwise in a circle, the ten-digit will be shown 1, and it means the flow rate is 10 Liter.

– For the rest indication:
the rest may be deduced by analogy.

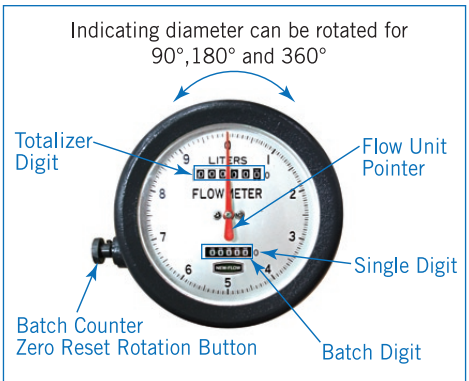

Zero Reset Type
With Batch Counter

– Totalizer digit cannot be reset to zero.
– Batch digit can be reset to zero.

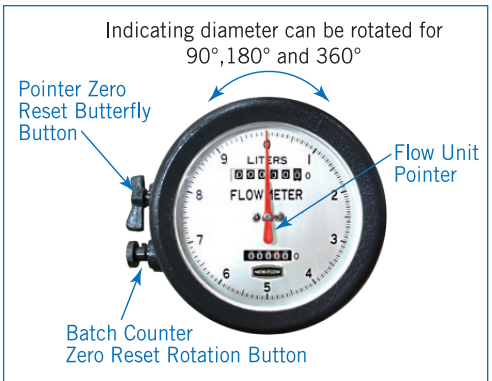

Zero Reset Type
With Batch Counter & Pointer

– Pointer zero reset & Batch counter zero reset (only for zero reset JAR type)

When the pointer pass or stays on the scale of 1, the first number of batch will be shown 1, and it means the flow raet is 1 Liter. But, if the flow raet < 1 Liter, the first number of batch digit remains at 0 location. The maximum flow rate will be 99999 Liter < 100 m³.

WWW.NEW-FLOW.DE | Tel: +49 3682 49099 | Fax: +49 3682 49093 | E-Mail: info@mess-regel.de

Flow Range Table (L/H- liter per hour)

Type number	Diameter (mm)	viscosity terms		Water: 80 °C less normal temp. water	Water: 80~120 °C high temp. water	Chemicals: Concentrated sulfuric acid, nitric acid	Petrochemicals: Plasticizer 50cp	Petrochemicals: Tar 500cp	Petrochemicals: Polyester 2000cp
JA	25	Normal	Intermittent	800~ 3,500	800~ 3,000	800~ 3,000	800~3,500	800~4,000	800~4,000
			Continuous	800~ 2,500	800~ 2,000	800~ 2,500	800~3,000	800~3,000	800~3,000
		Maximum		5,500	4,000	4,000	4,000	4,500	4,500
JA	40	Normal	Intermittent	1,000~ 5,000	1,000~ 4,000	1,000~ 6,000	1,000~ 6,000	1,000~ 6,000	1,000~ 5,000
			Continuous	1,000~ 4,000	1,000~ 3,000	1,000~ 5,000	1,000~ 5,000	1,000~ 5,000	1,000~ 4,000
		Maximum		6,000	5,000	7,000	7,000	7,000	5,500
JA	50	Normal	Intermittent	1,500~ 9,000	2,000~ 8,000	1,000~ 6,000	1,000~ 12,000	1,000~ 12,000	1,000~ 10,000
			Continuous	1,500~ 7,000	2,000~ 6,000	1,000~ 5,000	1,000~ 10,000	1,000~ 10,000	1,000~ 7,500
		Maximum		10,000	9,000	7,500	12,000	12,000	12,000
JA	80	Normal	Intermittent	3,500~ 25,000	5,000~ 21,000	3,500~ 21,000	3,000~ 22,000	3,000~ 22,000	3,000~ 20,000
			Continuous	3,500~ 20,000	5,000~ 18,000	3,500~18 ,000	3,000~ 20,000	3,000~ 20,000	3,000~ 18,000
		Maximum		25,000	25,000	25,000	25,000	25,000	22,000

Name of applicable fluid (reference)				Petroleum: L.P.G.	Gasoline	Kerosene	Light oil A-heavy oil (high temp)	A-heavy oil	C-heavy oil	C-heavy oil	High viscosity fluid
Type number	Diameter (mm)	viscosity terms		0.1 C P~	0.5~	2	5~	10~	150~	500~	2000~
JA	25	Normal	Intermittent	1,000~ 3,500	600~ 5,000	500~ 5,000	500~ 6,000	500~ 6,000	500~ 6,000	500~ 5,000	500~ 4,500
			Continuous	1,000~ 3,000	600~ 4,000	500~ 4,000	500~ 5,000	500~ 5,000	500~ 5,000	500~ 4,000	500~ 3,500
		Maximum		5,000	6,500	6,500	7,000	7,000	7,000	6,000	5,000
JA	40	Normal	Intermittent	1,000~ 4,500	1,000~ 5,500	800~ 6,000	500~ 6,000	500~ 7,000	500~ 7,000	500~ 6,000	500~ 5,500
			Continuous	1,000~ 3,500	1,000~ 4,000	800~ 5,000	500~ 5,000	500~ 6,000	500~ 6,000	500~ 5,000	500~ 4,500
		Maximum		6,000	6,000	7,000	7,000	8,000	8,000	7,000	6,000
JA	50	Normal	Intermittent	2,000~ 10,000	2,000~ 10,000	1,500~ 12,000	800~ 12,000	800~ 12,000	1,000~ 12,000	1,000~ 12,000	1,000~ 10,000
			Continuous	1,000~ 8,000	2,000~ 8,500	1,500~ 10,000	800~ 10,000	800~ 10,000	1,000~ 10,000	1,000~ 10,000	1,000~ 9,000
		Maximum		12,000	12,000	13,000	13,000	13,000	12,000	12,000	11,000
JA	80	Normal	Intermittent	3,500~ 20,000	3,000~ 20,000	3,000~ 22,000	3,000~ 23,000	3,000~ 23,000	3,000~ 23,000	3,000~ 20,000	3,000~ 19,000
			Continuous	3,500~ 17,000	3,000~ 17,000	3,000~ 19,000	3,000~ 20,000	3,000~ 20,000	3,000~ 20,000	3,000~ 19,000	3,000~ 17,000
		Maximum		22,000	22,000	25,000	27,000	27,000	27,000	25,000	22,000

NOTE. If your request size is bigger than DN80 or the flow range is higher than 25m³/hr (our option special flow range is 30m³/hr), please consult the factory.

Ordering Information

Code	Model
JA	Standard Type
JAR	Zero Rest Type
JAH	High Temperature Type
JAT	Pulse Transmitter Type

Code	Connection Size
	(1) 1" (2) 1½" (3) 2" (4) 3"

Code	Flange Rating
	(A) JIS 10K (B) JIS 20K
	(C) ANSI 150# (D) ANSI 300#
	(E) PN10 (F) PN16

Code	Body Material
	(1) Cast Iron (2) Carbon Steel (3) SS304 (4) SS316

Code	Inner Material (Housing-Roots)
	(A) Bronze-Aluminum (B) Bronze-Bronze (C) Bronze-SS304
	(D) SS304-SS304 (E) SS316-SS316

Code	Indicator Housing Unit– only for JAT type
	(1) Weather proof type (2) Explosion proof type
	(3) Without

Code	Signal Output (NPN)–only for JAT type
	(1) 100 cc/pluse (2) 1 liter/pluse
	(3) 10 liter/pluse (4) Without

[ ][ ][ ] + [ ][ ][ ][ ] Complete Ordering code

WWW.NEW-FLOW.DE | Tel: +49 3682 49099 | Fax: +49 3682 49093 | E-Mail: info@mess-regel.de