HORIZONTAL MAGNETIC LEVEL SWITCH
LR SERIES

The LR Series of float-operated level switch. Suitable for control the liquid level with horizontal mounting. The float extension arm moves a magnet which actuated reed switch offer an open or dosed contact upon request by user.



LR-201W



LR-201X



LR-201

Technical Data

General Purpose, IP65
Explosion Proof – EExdIICT6
Chemical Duty
Sp. Gr.: Minimum 0.6
Screwed Mounting
Connection: ½", ¾" or 1" NPT male available
Max. Pressure: 10 kg/cm²
Max. Temperature: -10~120°C
Float Material: SS316
Wetted Part Material: SS316

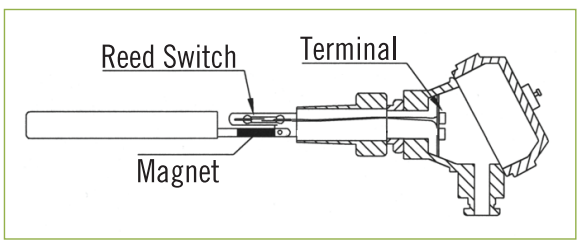

Reed Switch Type

Contact Form	A (SPST)	C (SPDT)
Switching Capacity Max.	40 W/VA	60 W/VA
Switching Voltage Max.	230V AC/DC	230V AC/DC
Switching Current Max.	2A	1A
Carrying Current Max.	3A	2A

*Special rate available on request.

Dimension-mm

Standard Type

LR-201W Type–IP65

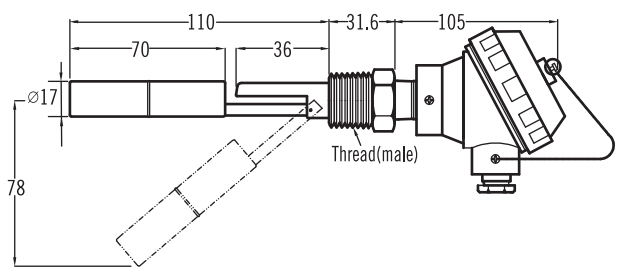

LR-201X Type– Explosion Proof

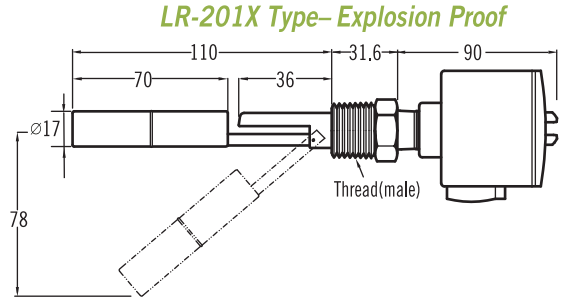

LR-201 Type– General Purpose

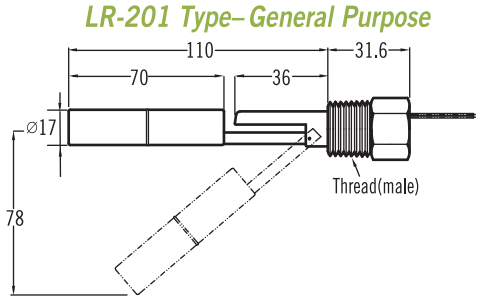

Extension Arm Type

LR-201W Type–IP65

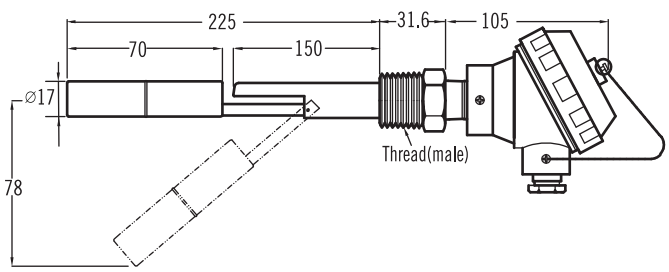

LR-201X Type– Explosion Proof

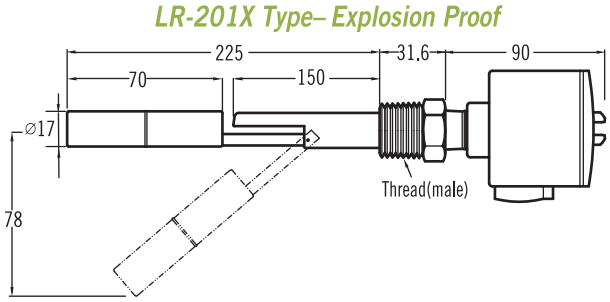

LR-201 Type– General Purpose

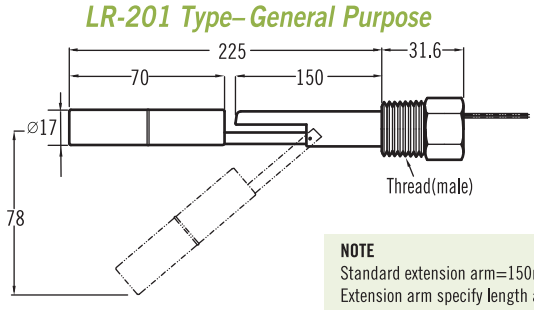

NOTE
Standard extension arm=150mm
Extension arm specify length available.

WWW.NEW-FLOW.DE | Tel: +49 3682 49099 | Fax: +49 3682 49093 | E-Mail: info@mess-regel.de

Float Level Switch Action Mode

(A) Switch Action: Close (ON)

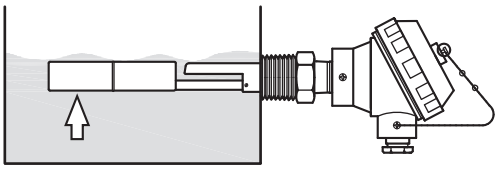

(B) Switch Action: Open (OFF)

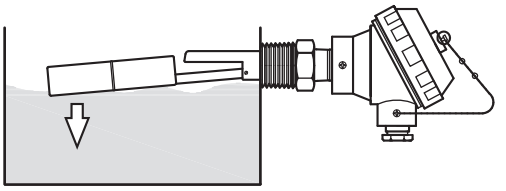

(C) Switch Action: Close (ON)
Particle or garbage mixed liquid no recommend

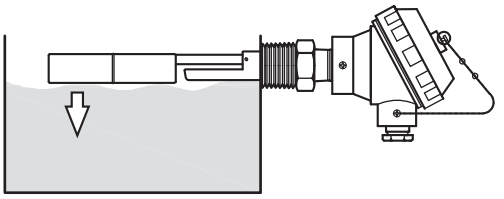

(D) Switch Action: Open (OFF)
Particle or garbage mixed liquid no recommend

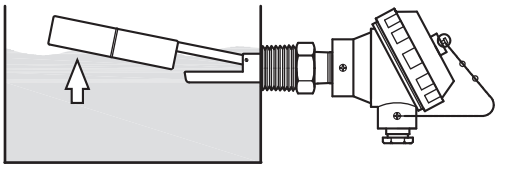

Ordering Information

LR	Code	Type		
	S	Standard Type	E	Extension Arm Type

Code	Model
	201W (IP65) 201X (Explosion Proof EExdIICT6) 201 (General Purpose)

Code	Contact Form
	(1) A Type (2) C Type

Code	Float Material
S	SS316

Code	Connection Size
	(1) ½"NPT(M) (2) ¾"NPT(M) (3) 1"NPT(M)

Code	Conduit Size
	(1) ½"NPT(F) (2) ¾"NPT(F)

							Complete Ordering Code

WWW.NEW-FLOW.DE | Tel: +49 3682 49099 | Fax: +49 3682 49093 | E-Mail: info@mess-regel.de