HORIZONTAL MAGNETIC LEVEL SWITCH

LXT203F Flange Type For High Temperature

LXT203F float-operated level switches are suitable for controlling liquid level at horizontal mounting. The float euipped with an extended arm moves a couple magnetic mechanism to actuate a microswitch to offer an ON-OFF contact for application. LXT203F is equipped with an extra fin to be able to work under high temperature environment.

Technical Data

Enclosure housing: Explosion proof- EEx d II C T6, IP65
Process connection: 1½"~4" Flange type
Flange rating: JIS, ANSI, DIN available
Material: Wetted parts 316 stainless steel
Temperature limits: -20°C to +350°C
Pressure limits: 3.0 MPa (30 kg/cm²), option: up to 4.5 MPa
Float working specific gravity: ≥0.7
(option: less than 0.7 available on request)
Switch function: SPDT Micro switch
Switch rating: 3A/250VAC, 3A/30VDC, 0.4A/125VDC
Conduit connection: ½"NPT, ¾"NPT female, option available

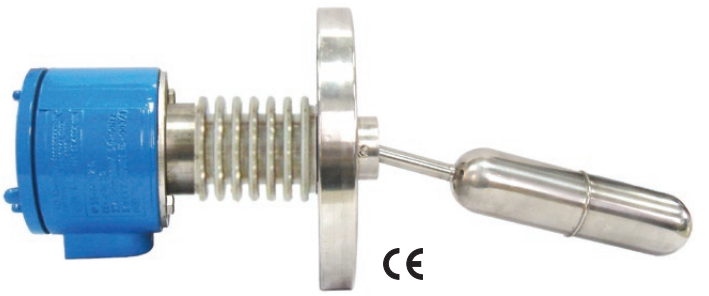

Dimensions

Standard Tpye

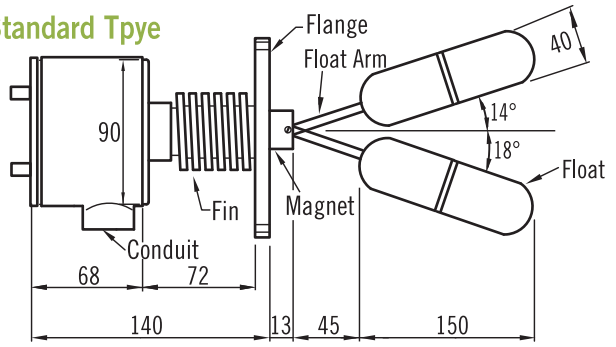

Extension Arm Type

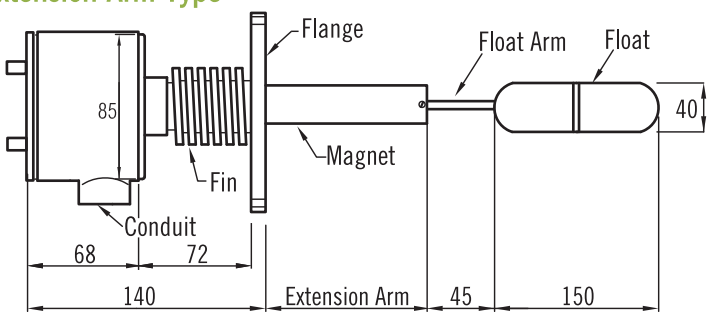

*Option: Extension arm specify length available (standard 150mm).

unit=mm

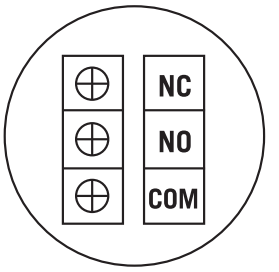

Wire Drawing

Ordering Information

LXT203F	Code	Type		
	S	Standard type	E	Extension Arm Type

Code	Process Connection Size
	(1) 1½" (2) 2" (3) 3" (4) 4" (5) Option

Code	Process Connection Rating
	(A) JIS10K (B) JIS20K (C) ANSI 150 (D) ANSI 300 (E) PN16 (F) PN25 (G) option

Code	Conduit Connection Size
	(1) ½"NPT (2) ¾"NPT (3) Option

Code	Flange Material
	(1) SS316 (2) SS304 (3) Option

LXT203F						Complete Ordering Code

WWW.NEW-FLOW.DE | Tel: +49 3682 49099 | Fax: +49 3682 49093 | E-Mail: info@mess-regel.de