METAL TUBE FLOW METER MF200

Technical Data

MF200 for low flow of gas, liquid and steam
Material: aluminum alloy painted for case; body in stainless steel.
Indication: via magnetic coupling (no seals)
Scales: calibrated in l/h,m³/h,kg/h, %
Flow rate: water–0.4 l/h up to 6000 l/h
air–21 NL/h up to 150,000 NL/h
Connection types: BSP, NPT, flange type on request
Working Temperature:
Combine with electronic parts: -40°C~+150°C
Combine without electronic parts: -40°C~+180°C
Working Pressure: standard 100 kg/cm²; other options upon request
Connection size: ¼" ~ 2"
Protection Class: IP65
Accuracy: ± 2% F.S (± 1.6% F.S option)



Alarm Option

MF200–C (Inductive Switch)

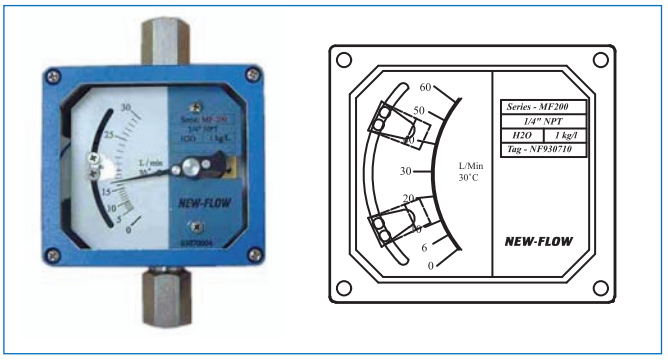

- ***Adjustable inductive alarm switch***
  Hysteresis: ±2% F.S (Dead Band)
  Inductive sensors slotted type : 3.5mm slot switch DC. voltage 2 wire's to DIN19234(NAMUR) for use in hazardous areas.
  — **Power supply:** 8 Vdc(Ri.approx. 1kΩ)
  — **Current consumption:** active face uncoved 3mA
  active face coved 1mA
  — **Ambient temp:** -25°C ~ +100°C

Isolated barriers output relay for inductive sensor :
— Rail mounting
— Control circuit EEx ia IIC
— EMC acc to NAMUR NE21
— Contact loading 253 VAC 2A SPDT 40 VDC 2A

1 adjustable alarm
Contact setting point should be within 10% to 100% of F.S.
For 24VDC : KFD2-SR2-Ex1.W
115VAC : KFA5-SR2-Ex1.W
230VAC : KFA6-SR2-Ex1.W

2 adjustable alarm
The second setting point should be a gap 35% from first setting point.
For 24VDC : KFD2-SR2-Ex2.W
115VAC : KFA5-SR2-Ex2.W
230VAC : KFA6-SR2-Ex2.W

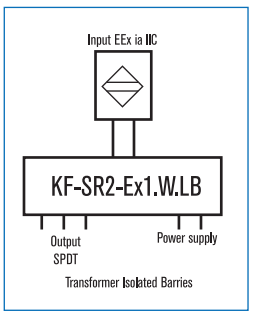

MF200–R (Reed Switch)

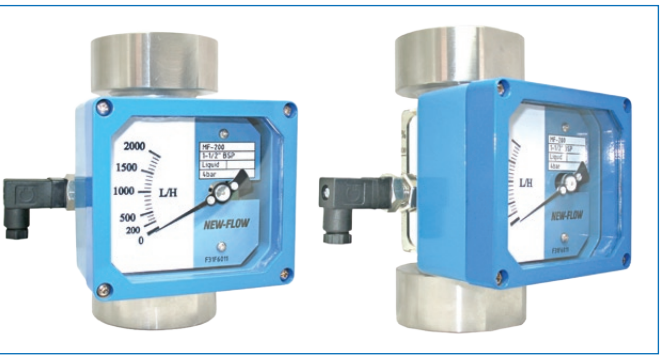

- ***Adjustable reed alarm switch***
  Alarm Switch: one or two setting points, form A bistable type (N.O. type)
  Hysteresis: ±15% F.S (Dead Band)
  Switch Rating: AC 125V 0.5A / DC 100V 10W / Max. DC 250V < 1mA

1 adjustable alarm
Contact setting point should be within 20% to 100% of F.S.

2 adjustable alarm
The second setting point should be a gap 20% from first setting point.

Principle

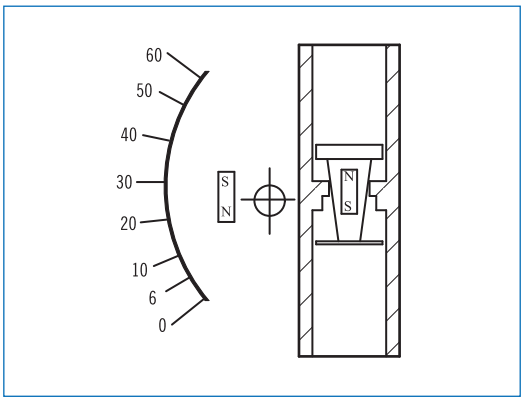

WWW.NEW-FLOW.DE | Tel: +49 3682 49099 | Fax: +49 3682 49093 | E-Mail: info@mess-regel.de

Dimensional Drawings

MF200-B Metal Tube Flow Meter

Basic Model:
Rear connection + needle valve

NOTE.
Max. range: 1000 L/H for Liquid; 30000 NL/H for Air
Connection size: ¼"~¾"BSP/NPT available

Model: MF200-B

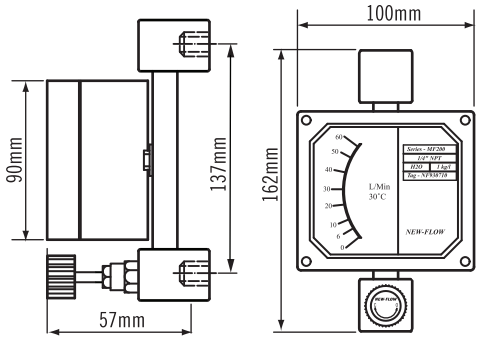

MF200-S Metal Tube Flow Meter

Basic Model:
Thread connection

NOTE.
*1½"BSP, C to C =170mm

Model: MF200-S

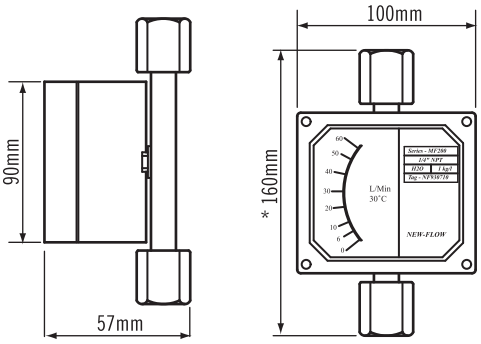

MF200-R Metal Tube Flow Meter

Flange-needle Model:
flange connection + needle valve

Model: MF200-R

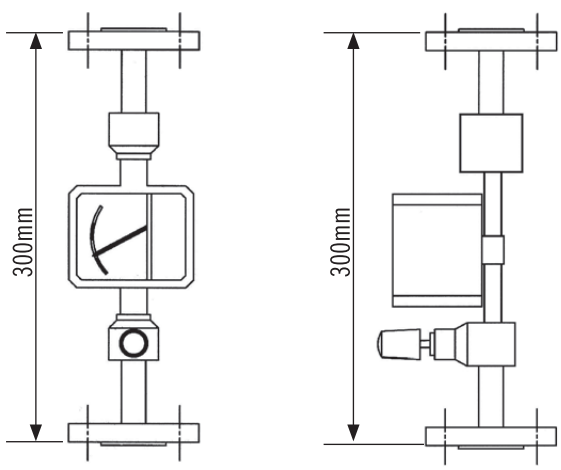

MF200-T Metal Tube Flow Meter

Flange Model:
flange connection

Model: MF200-T

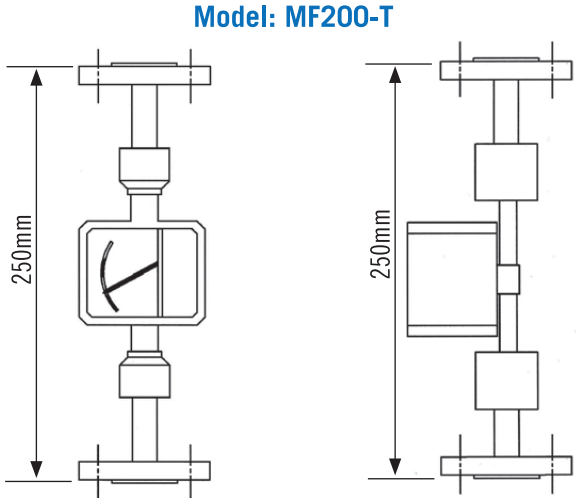

WWW.NEW-FLOW.DE | Tel: +49 3682 49099 | Fax: +49 3682 49093 | E-Mail: info@mess-regel.de

Standard Scales

Tube	L/H 20°C Water	NL/H Air 20°C 1.013 bar	ΔPmm Water	BSP/NPT	Accuracy (NOTE 1.)
MF2001	0.4 ~ 4	21~210	340	1/4"	±6% F.S
MF2002	0.6 ~ 6	33~330	340	1/4"	±3% F.S
MF2003	1 ~ 10	48~480	340	1/4"	±2% F.S
MF2004	1.5 ~ 15	60~600	340	1/4"	±2% F.S
MF2005	2 ~ 20	72~720	340	1/4"	±2% F.S
MF2006	3 ~ 30	90~900	340	1/4"	±2% F.S
MF2007	5 ~ 50	120~1200	340	1/4"	±2% F.S
MF2008	6 ~ 60	180~1800	340	1/4"	±2% F.S
MF2009	10 ~ 100	300~3000	340	1/4"	±2% F.S
MF2010	15 ~ 150	500~5000	340	1/2"	±2% F.S
MF2011	25 ~ 250	750~7500	340	1/2"	±2% F.S
MF2012	40 ~ 400	1200~12000	340	1/2"	±2% F.S
MF2013	60 ~ 600	1800~18000	340	1/2"	±2% F.S
MF2014	75~750	2000~20000	340	3/4"	±2% F.S
MF2015	100 ~ 1000	3000~30000	340	1"	±2% F.S
MF2016	150~1500	5000~50000	450	1-1/2"	±2% F.S
MF2017	200~2000	7500~75000	450	1-1/2"	±2% F.S
MF2018	300~3000	9000~90000	450	1-1/2"	±2% F.S
MF2019	350~3500	11000~110000	450	1-1/2"	±2% F.S
MF2020	400~4000	12000~120000	450	1-1/2"	±2% F.S
MF2021	600~6000	15000~150000	520	2"	±2% F.S

NOTE.

1. The accuracy ±6% F.S for tube MF2001; The accuracy ±3% F.S for tube MF2002.
   The accuracy ±2% F.S for tube MF2003~MF2021 and option ±1.6% F.S on request.
2. Performance Technical Data are effective with date of issue and are subject to change without prior notice.

Installation

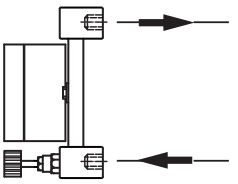

REAR FLOW DIRECTION

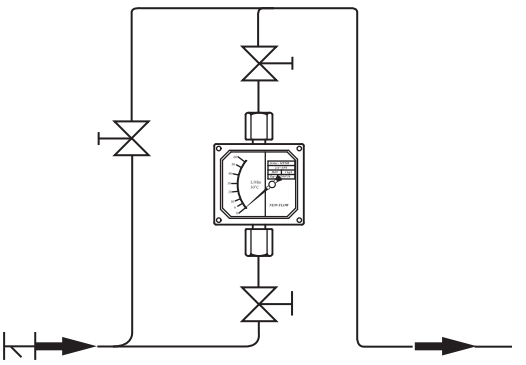

HORIZONTAL FLOW DIRECTION

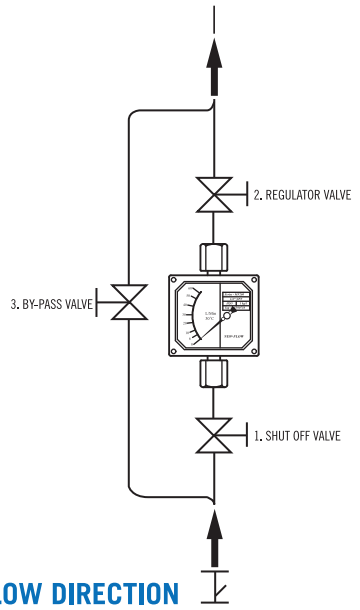

UP FLOW DIRECTION

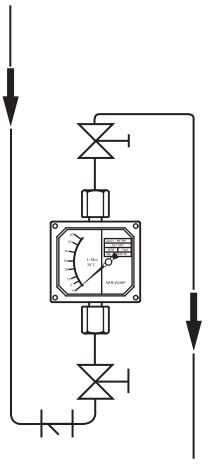

FALLING FLOW DIRECTION

SPECIAL NOTE
No minimum length requirement for straight pipe.

WWW.NEW-FLOW.DE | Tel: +49 3682 49099 | Fax: +49 3682 49093 | E-Mail: info@mess-regel.de

Ordering Information

MF200	Code	Connection
	S	Thread connection
	R	Connection with needle valve
	T	Flange connection
	B	Rear connection with needle valve

Code	Type
G	Indicating only
GS	Indicating + switch

Code	Alarm
0	Without alarm switch
C1	One inductive alarm switch
C2	Two inductive alarm switches
R1	One reed switch
R2	Two reed switches

Code	Body material
A	SS316

Code	Float & Wetted part material
A	SS316

Code	Connection rating
0	Thread connection
5	JIS 5K
10	JIS 10K
20	JIS 20K
15	ANSI 150#
30	ANSI 300#
40	ANSI 400#
60	ANSI 600#
T	Other:_____

Code	Connection size
4B	1/4" BSP (Female)
4N	1/4" NPT (Female)
2B	1/2" BSP (Female)
2N	1/2" NPT (Female)
6B	3/4" BSP (Female)
6N	3/4" NPT (Female)
1B	1" BSP (Female)
1N	1" NPT (Female)
15B	1½" BSP (Female)
15N	1½" NPT (Female)
20B	2" BSP (Female)
20N	2" NPT (Female)
2F	½" Flange
6F	¾" Flange
10F	1" Flange
15F	1 ½" Flange
20F	2" Flange

Code	Protection Class
IP	IP65

Code	Fluid
G	Gas
O	Oil
L	Liquid
S	Steam

Code	Range
S	Standard range
	Please directly fill out the flow range in the order code.

MF200							+					Complete ordering code

NOTE:
1. Custom-made flow range and flange size upon request.
2. Please fill in the ordering information and service condition, and fax this sheet along with your inquiry to 886-7-8225588.

Special instruction, if any:

_____

_____

_____

Service Condition:

Fluid name: _____

Sp. Gr. (density): _____

Viscosity: _____

Press.: _____

Temp.: _____

Full scale: _____

WWW.NEW-FLOW.DE | Tel: +49 3682 49099 | Fax: +49 3682 49093 | E-Mail: info@mess-regel.de