TUBULAR TYPE LEVEL GAUGE

NL SERIES – With Protection Support Rod SL SERIES – With Protection Support Pipe

The tubular glass type is a simplest liquid level gauge for using in the pressure rating of 10 kg/cm² or under. The center to center length are over 1.5 meter. The intermediary joint ring would be used. Gauge glsas are made heat resistant borosilicate.

Technical Data

Suitable Fluid: Water, Oil, other chemical liquid
Gauge Valve Material: SS304, SS316, others available
Gauge Tube Material: Glass, P.V.C
Seal Material: Viton, Teflon available
Gauge Valve Function: With or Without ball check
Max. Working Temperature: 100°C
Max. Working Pressure: 4~7 kg/cm²
Process Connection: ½"~1½" Thread and Flange on request.
Flange Rating: JIS, ANSI, DIN available
Drain Valve Connection: standard ½"NPT(F); option available



NLT-1



NLF-1



SLT-1



SLF-1



SCALE

Dimensions for NL Series

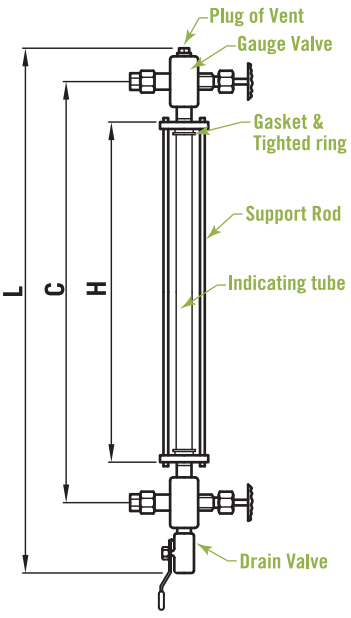

NLT-1 Thread Type

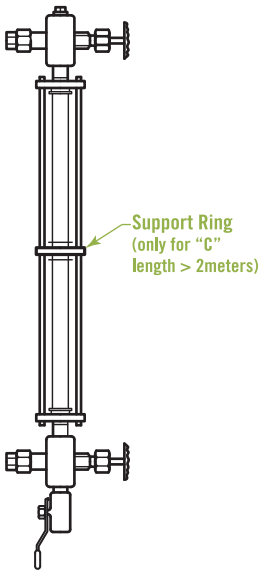

NLT-2 Thread Type

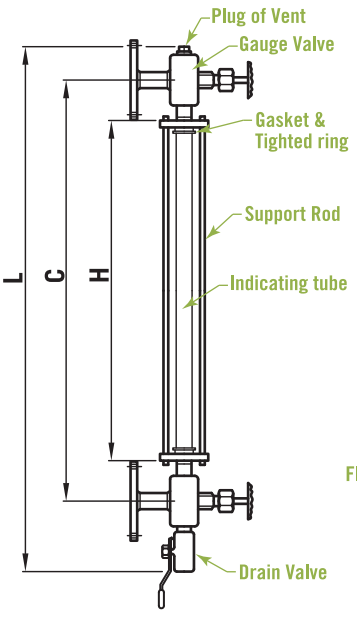

NLF-1 Flange Type

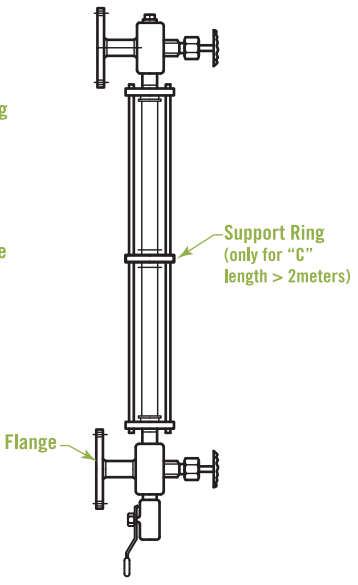

NLF-2 Flange Type

Item \ mm	L	C	H	Section
1	400	300	200	1
2	600	500	400	1
3	900	800	700	1
4	1200	1100	1000	1
5	1300	1200	1100	1
6	1600	1500	1400	2
7	1900	1800	1700	2
8	2100	2000	1900	2

NOTE. The "C" dimension can be made by requirement of customer. Option available.

WWW.NEW-FLOW.DE | Tel: +49 3682 49099 | Fax: +49 3682 49093 | E-Mail: info@mess-regel.de

Dimensions for SL Series

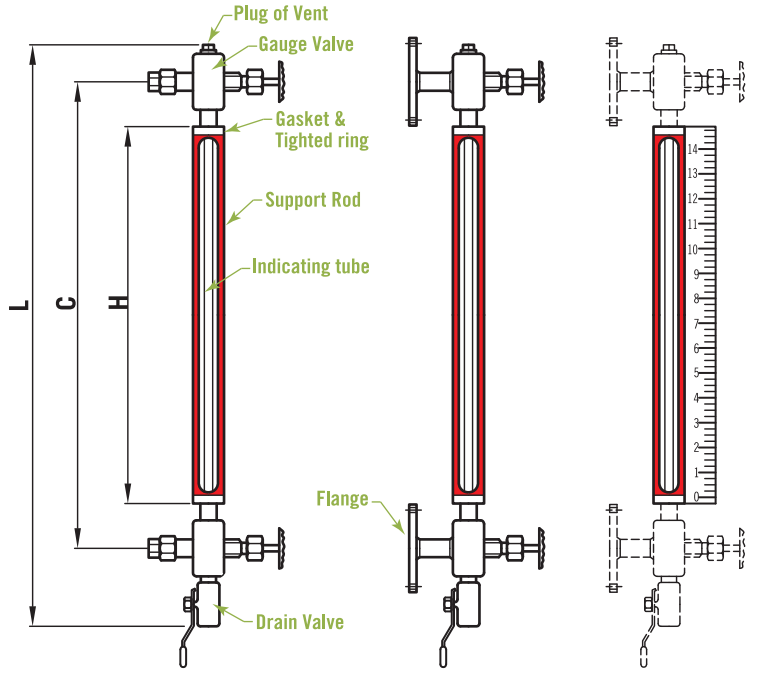

SLT-1 Thread Type | SLF-1 Flange Type | Indication Scale

Item \ mm	L	C	H	Section
1	400	300	200	1
2	600	500	400	1
3	900	800	700	1
4	1100	1000	900	1
5	1300	1200	1100	1
6	1600	1500	1400	2
7	1900	1800	1700	2
8	2100	2000	1900	2

NOTE. The "C" dimension can be made by requirement of customer. Option available.

Ordering Information

Model		
	NLT-1	with protection support rod; Thread type (section 1)
	NLT-2	with protection support rod; Thread type (section 2)
	NLF-1	with protection support rod; Flange type (section 1)
	NLF-2	with protection support rod; Flange type (section 2)
	SLT-1	with protection support pipe; Thread type
	SLF-1	with protection support pipe; Flange type

Code	Connection Size
Thread	**(A)** ½"NPTM **(B)** ½"NPTF **(C)** ¾"NPTM **(D)** ¾"NPTF **(E)** option
Flange	**(F)** ½" JIS 10K **(G)** ¾" JIS 10K **(H)** 1" JIS 10K
	(I) ½" ANSI 150# **(J)** ¾" ANSI 150# **(K)** 1" ANSI 150# **(L)** option

Code	Gauge Valve Material
	(1) SS304 **(2)** SS316 **(3)** option

Code	Gauge Tube Material
	(1) Glass **(2)** PVC **(3)** Teflon

Code	Seal Material
	(1) Viton **(2)** Teflon

Code	The Function of Gauge Valve
	(A) With ball check **(B)** Without ball check

Code	Drain Valve Connection
	(1) ½"NPTF, standard **(2)** Option

Code	Center to Center length (C to C)
	Please directly fill out the length you required

Complete Ordering Code

WWW.NEW-FLOW.DE | Tel: +49 3682 49099 | Fax: +49 3682 49093 | E-Mail: info@mess-regel.de