PRESSURE GAUGE WITH MICRO SWITCH EXPLOSION PROOF TYPE

PIS5000X

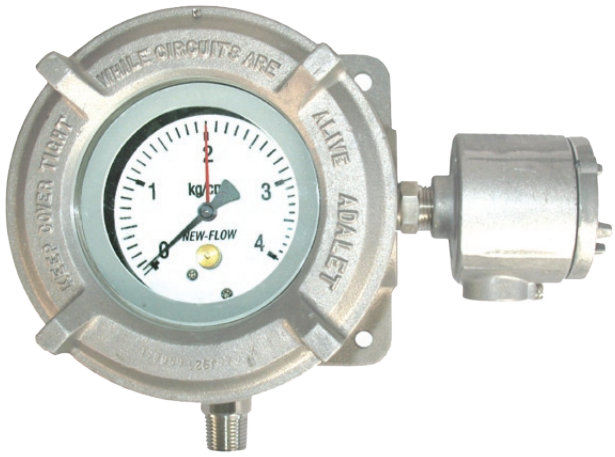

CLASS I, GROUPS A, B, C, D; CLASS II, GROUPS E, F, G; NEMA 4X
Micro Switch
Measuring Range: 0.1 MPa~40 MPa , 1~400 kg/cm² Available

Technical Data

Material: Bourdon tube SS316, Wetted parts SS316
Housing: Die cast aluminum alloy
Dial: ø6"
Process Connection: 3/8", 1/2"NPT, option with adaptor available
Electronic Connection: 1/2"NPT, option with adaptor available
Accuracy: Gauge indication ±1.6% F.S
Pressure limited: Over range protected 130% of full scale range
Switch form: One setting point: SPDT x 1 or Two setting point: SPDT x 2 available
Set point: Full scale range available
Switch dead band: ±2% of Full Scale
Switch data:

	AC Load	DC Load
Nominal Operating Voltage	250 VAC max.	28 VDC max.
Current	5A max.	5A max. (ohmic load) 3A max. (inductive load)
Contact Material	Pure silver 999.9	Pure silver 999.9
Ambient Temperature	-20°C ~ +70°C	-20°C ~ +70°C

Range Selection Table – KG/CM²

Code	Range	Code	Range	Code	Range	Code	Range	Code	Range
001	0~1	004	0~4	007	0~16	010	0~40	013	0~160
002	0~1.6	005	0~6	008	0~20	011	0~60	014	0~250
003	0~2.5	006	0~10	009	0~25	012	0~100	015	0~400

NOTE.
1. Scale Unit: MPa, Kg/cm², Bar available
2. 1bar=0.1Mpa, 1bar=1.01972kg/cm², 1Pa=1x10^{-6} MPa, 1MPa=10.197 kg/cm²

Dimension

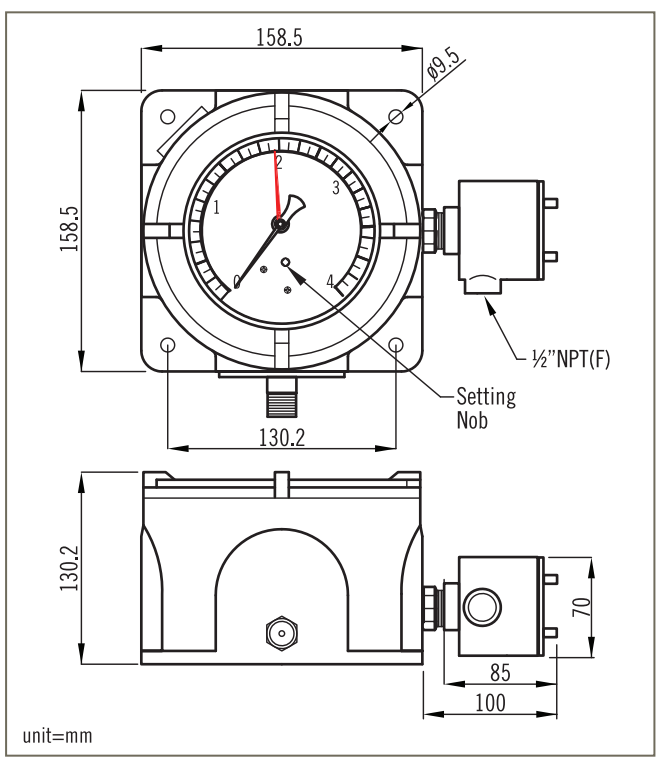

Ordering Information

PIS5000X	Code	Process Connection
		(1) 3/8"NPT (2) 1/2"NPT (3) Option

Code	Conduit Connection		
A	½"NPT Female	B	Option

Code	Material
S	SS316

Code	Switch Function
1	One setting point SPDT x 1
2	Two setting point SPDT x 2

Code	Measuring Range
	Please refer to selection table and fill in request range.

PIS5000X					

WWW.NEW-FLOW.DE | Tel: +49 3682 49099 | Fax: +49 3682 49093 | E-Mail: info@mess-regel.de