PRESSURE SWITCH EXPLOSION PROOF TYPE

PS2200X

CLASS I, GROUPS A, B, C, D;
CLASS II, GROUPS E, F, G; NEMA 4X
Proof Pressure to 1000psi
Adjustable Ranges: 0.05~9.8psi
Temperature: -25 to 205°C



The New-Flow PS2200X, an explosion proof pressure switch, is designed to be used in control systems. PS2200X has high set point repeatability and narrow dead band features. A variety of range selections are available upon request. Easily adjusted to the set point, no special tools needed!

Technical Data

Switch Data: one SPDT & two SPDT Microswitch, 15amps 125/250VAC, Gold Contact Microswitch 1A 125/250VAC
Housing: die cast aluminum alloy with paint
Conduit Connection: ¾" or ½" NPT Female
Pressure Element: welded type diaphragm
Process Materials: wetted parts are all in SS316
Process Connection: ½" or ¼" NPT male

Dimension

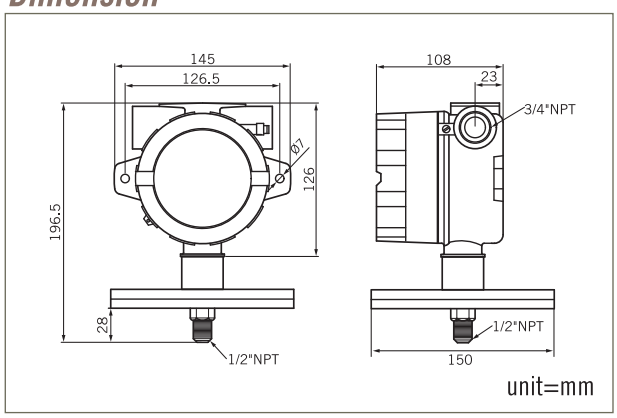

Range Selection Table

Code	Adjustable Range	Dead Band	Maximum Pressure Proof
04R	0.05~1.8 psi	0.015~0.3	1000psi
10R	0.4~2.8 psi	0.2~0.5	1000psi
20R	0.4~5.0 psi	0.3~0.6	1000psi
30R	1.6~9.8 psi	0.3~0.8	1000psi

Ordering Information

PS2200X	Code	Range							
		04R	0.05~1.8psi	10R	0.4~2.8psi	20R	0.4~5.0psi	30R	1.6~9.8psi

Code	Wetted Material
A	SS316

Code	Process Connection
	(1) ½" NPT male (2) ¼" NPT male

Code	Conduit Connection
	(E) ¾" NPT Female, standard (F) ½" NPT Female

Code	Switch Form
1	One SPDT
2	Two SPDT (one setting point)
3	Gold Contact (SPDT)

PS2200X						Complete Ordering Code

WWW.NEW-FLOW.DE | Tel: +49 3682 49099 | Fax: +49 3682 49093 | E-Mail: info@mess-regel.de