PRESSURE SWITCH NEMA 4, 4X, IP65

PSA2100W

Proof Pressure to 1000psi
Adjustable Ranges: 2~100psi
Temperature: -20 to 205°C
Dead Band: Adjustable

The New-Flow PSA2100W, a water proof pressure switch, is designed to be used in control systems. PSA2100W has high set point repeatability and narrow dead band features. There are a variety of range selections available upon request. Easily adjusted to the set point, no special tools needed!



Technical Data

Switch Data: 20Amp @ 125, 250 or 480 VAC
Housing: die cast aluminum alloy with paint
Conduit Connection: ¾" or ½" NPT Female
Pressure Element: welded type diaphragm
Process Materials: wetted parts are all in SS316
Process Connection: ½" or ¼" NPT Female

Range Selection Table

Code	Pressure Range	Adjustable Dead Band at "E" Position	Maximum Pressure Proof
04R	2~12psi	1.2~3	1000psi
10R	2~16psi	1.6~4	1000psi
20R	2~20psi	2~5	1000psi
30R	3~28psi	2.8~7	1000psi
40R	7~100 psi	9.9~28.4	1000psi

Dimensions

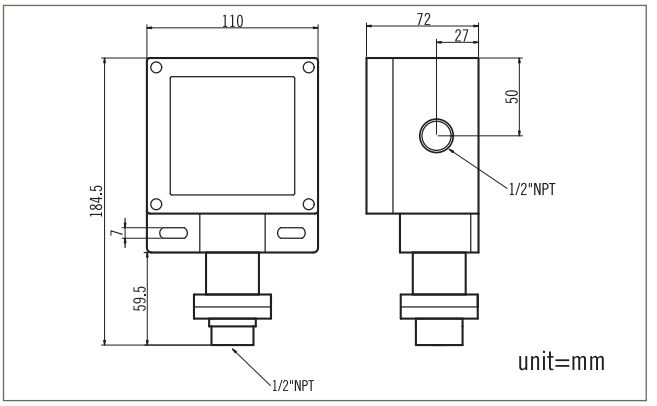

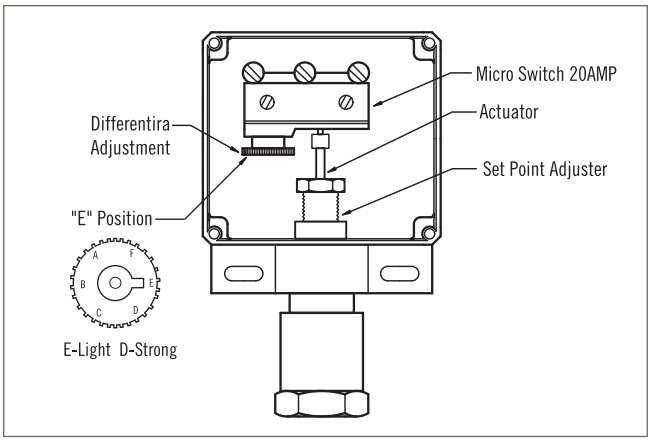

Ordering Information

PSA2100W	Code	Range									
		04R	2~12psi	10R	2~16psi	20R	2~20psi	30R	3~28psi	40R	7~100 psi

Code	Wetted Material
A	SS316

Code	Process Connection
	(1) ½" NPT Female (2) ¼" NPT Female

Code	Conduit Connection
	(E) ¾" NPT Female (F) ½" NPT Female, standard

Code	Switch Form
1	One SPDT

PSA2100W						Complete Ordering Code

WWW.NEW-FLOW.DE | Tel: +49 3682 49099 | Fax: +49 3682 49093 | E-Mail: info@mess-regel.de