PRESSURE TRANSDUCER

PT3100

Accuracy: ±0.5% FS
Protection class: IP65
Range: -1/0 bar to 0/352 bar available
EMC Protection

PT3100 is suitable for the media of fluid and gas. Several measure ranges are available for a variety of automotive, industrial and commercial applications.



Technical Data

Accuracy: ±0.5% of full scale
(±1% F.S full scale for -1~0bar to 0~2.5bar only)
Range: refer to the Measure Range Table
Power supply: 11 to 30 volts DC
Output signal: 4-20 mA, 2 wires
EMC compatibility: 80MHz – 1GHz
Operating temperature: -10°C to +80°C
Conduit connection: M12 & Mini DIN Connectors, plastic
Material of wetted parts: SS316 or SS304
Process connections: ¼" NPT Male

Range Table

Code	Range	Code	Range	Code	Range	Code	Range
0V	-1/0 bar	0.2	0/0.2 bar	10	0/10 bar	250	0/250 bar
2.5V	-1/2.5 bar	0.6	0/0.6 bar	16	0/16 bar	350	0/350 bar
4.0V	-1/4 bar	1	0/1 bar	25	0/25 bar		
6.0V	-1/6 bar	1.6	0/1.6 bar	40	0/40 bar		
10V	-1/10 bar	2.5	0/2.5 bar	60	0/60 bar		
16V	-1/16 bar	4	0/4 bar	100	0/100 bar		
25V	-1/25 bar	6	0/6 bar	160	0/160 bar		

Code	Range	Code	Range	Code	Range
P5	0/5 psi	P100	0/100 psi	P2000	0/2000 psi
P15	0/15 psi	P500	0/500 psi	P3000	0/3000 psi
P50	0/50 psi	P1000	0/1000 psi	P5000	0/5000 psi

Over range protection:

1. Proof pressure range are 3 times of full scale.
2. Burst pressure range are 10 times of full scale.
3. Response time: ≤1ms

Dimensions

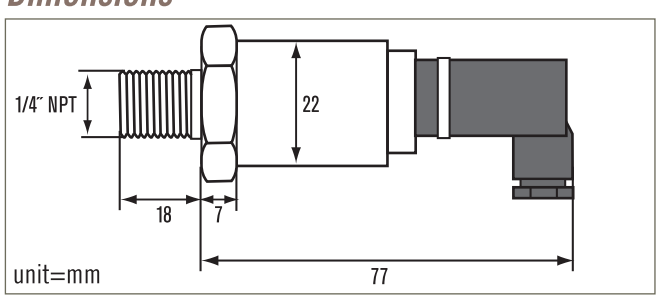

Connection Diagram

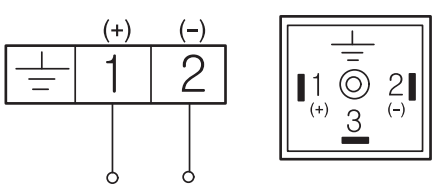

Connection

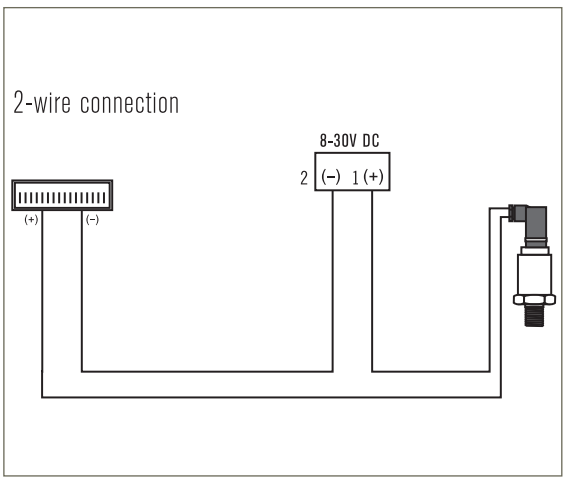

Ordering Information

PT3100	Code	Pressure Range
		Please refer to the Measure Range Table

Code	Wetted Part Material
1	SS316 (Standard)
2	SS304

Code	Connection port
U	1/4"NPT (standard)
S	Customized

PT3100				Complete Ordering Code

NOTE
Performance Technical Data are effective with date of issue and are subject to change without prior notice.

WWW.NEW-FLOW.DE | Tel: +49 3682 49099 | Fax: +49 3682 49093 | E-Mail: info@mess-regel.de