FILLED TYPE THERMOMETERS W/MICRO SWITCH

SHE4/SHE4-QS(ø100) & SHE6/SHE6-QS(ø150)

Technical Data

Direct Mounting
Liquid Gas Filled Availalbe
Dial Size: ø100, ø150 available
Material of Case & Cover: 316 stainless steel
Material of Stem: 316 stainless steel
Lens: Glass, Safety glass available
Housing Enclosure: IP65, liquid filled available
Range Limit: -50˚C to 600˚C
Stem Dimensions: ø6, 8, 10, 12mm available
Stem Length Limit: 65~1000mm, option available
Inner Zero Adjustalbe
Accuracy: Gauge Indication: ±1% F.S; Switch Acting Differential: ±1.6~3% F.S
Process Connection: ½"NPT standard, other available
Over Range Protection: 130% F.S
Swtich Form: One setting point SPDT x 1 or Two setting point SPDT x 2
Set Point: Full scale range available
Switch Data:

	AC Load	DC Load
Nominal Operating Voltage	250 VAC max.	28 VDC max.
Current	5A max.	5A max. (ohmic load) 3A max. (inductive load)
Contact Material	Pure silver 999.9	Pure silver 999.9
Ambient Temperature	-20˚C ~ +70˚C	-20˚C ~ +70˚C



SHE-QS
(Every Angle Connection)



SHE
(Bottom Connection)

Dimensions

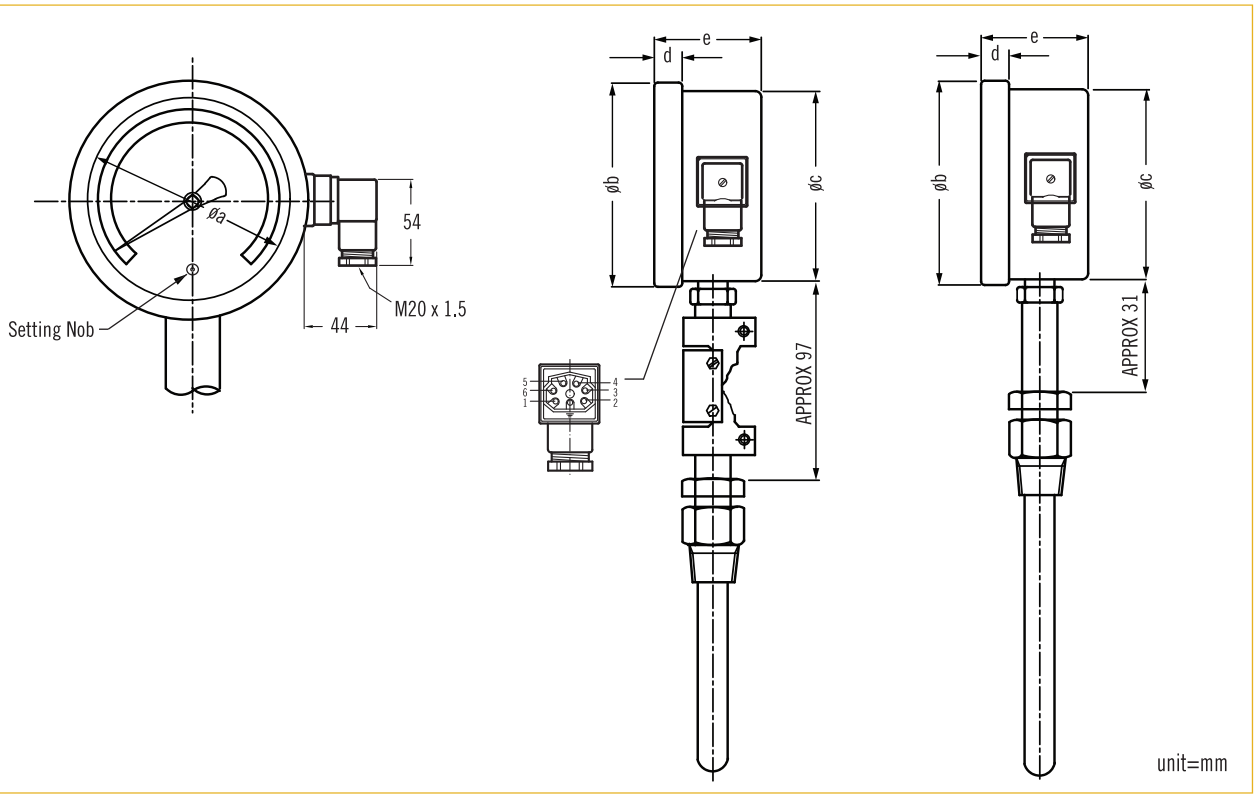

	a	b	c	d	e
SHE4 SHE4-QS	94	113	102	13	54
SHE6 SHE6-QS	140	165	153	15	54

*Sensor bulb and connection, consult to factory .

NOTE
Performance Technical Data are effective with date of issue and are subject to change without prior notice.

WWW.NEW-FLOW.DE | Tel: +49 3682 49099 | Fax: +49 3682 49093 | E-Mail: info@mess-regel.de

Connection Type

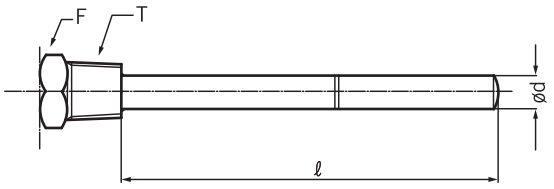

(A) Fixed Thread Type

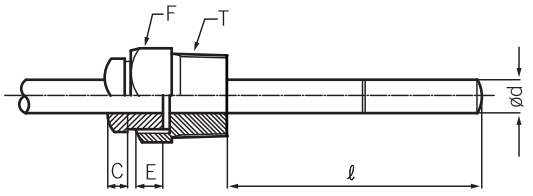

(B) Rotary Thread Type

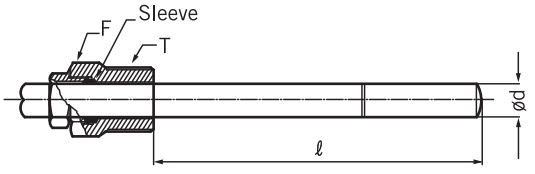

(C) Slide Thread Type
(Length "ℓ" changed available.)

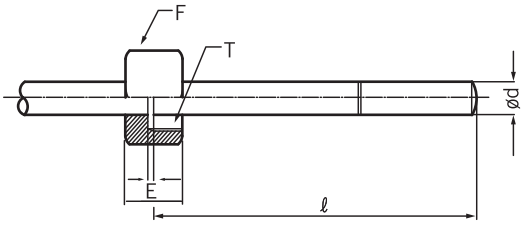

(D) Female Thread Type
(Rotation Style)

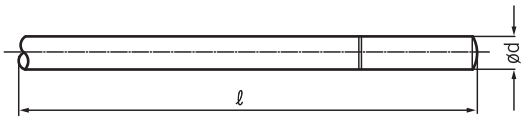

(E) Non Thread Type

T: Process connection
E: Stop plate for (rotary & rotation style)
F: Hexagonal head
ℓ: Sensor length
d: Sensor dimension

Table for Range and Insertion

LIQUID FILLED TYPE

Standard Scale Range (°C)	Minor Division (°C)		Minimum Insertion Length (mm)			
			Outer Diameter of Stem			
	Ø100	Ø150	Ø6	Ø8	Ø10	Ø12
-30~+50	1	1	135	91	53	37
-30~+100	2	2	89	61	38	28
-10~+50	1	1	175	116	66	45
-10~+100	2	2	102	70	42	31
0~50	1	1	207	137	76	52
0~80	1	1	135	91	53	37
0~100	1	1	111	75	45	33
0~120	2	2	95	65	40	29
0~150	2	2	79	55	34	26
0~200	2	2	63	44	29	23
0~250	5	5	53	38	26	21
0~300	5	5	47	34	24	20
0~400	5	5	39	29	21	18

GAS FILLED TYPE

Standard Scale Range (°C)	Minor Division (°C)	
	Ø100	Ø150
-200~+50	5	5
-200~+100	5	5
-200~+150	5	5
-200~+200	5	5
-100~+100	2	2
-100~+150	5	5
-100~+200	5	5
-50~+300	5	5
-50~+400	5	5
-50~+500	10	10
-50~+600	10	10
0~400	5	5
0~500	10	10
0~600	10	10

Minimum Stem Length		
mm \ Ød	Ø10	Ø12
Minimum length	270	200

OPTION.

1. Please note the minimum insertion length is not including the thread.
2. Special Range / Scale / Stem Diameter / Length are available upon request.

WWW.NEW-FLOW.DE | Tel: +49 3682 49099 | Fax: +49 3682 49093 | E-Mail: info@mess-regel.de

Ordering Information

Model	SHE4(ø100)	SHE6(ø150)	SHE4-QS(ø100)	SHE6-QS(ø150)

Code	Lens Material	Code	Lens Material
G	Glass	S	Safety Glass

Code	Connection Type	Code	Connection Type	Code	Connection Type
A	Fixed Thread Type	C	Slide Thread Type	E	Non Thread Type
B	Rotary Thread Type	D	Female Thread Type	0	Option

Code	Stem Diameter
	(1) ø6 (2) ø8 (3)ø10 (4)ø12

Code	Stem Length
	Refer to the Table for Range and Insertion, directly fill in request length(mm)

Code	Process Connection
	(A) 3/8" NPT (B) 1/2" NPT (C) 1/4" NPT (D) 3/8"PF (E) 1/2"PF (F)1/4"PF (0) Option

Code	Scale Range
	Refer to the Scale Range Table. Fill in the request range.

Code	Micro Switch		
1	One setting point SPDT x 1	2	Two setting point SPDT x 2

								Complete ordering code

Ordering information Sample:

Model	Lens Material	Connection Type	Stem Diameter	Stem Length	Process Connection	Scale Range	Micro Switch
SHE4-QS	S	A	ø6	100mm	B	0-100ºC	1

WWW.NEW-FLOW.DE | Tel: +49 3682 49099 | Fax: +49 3682 49093 | E-Mail: info@mess-regel.de