FLOW SIGHT GLASS GAUGE

T SERIES – Thread Connection With Spring Paddle

The flow sight glass was designed with spring paddle for easy observastion of flowing fluid from any direction.

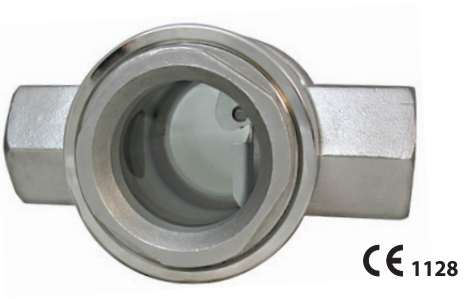

TA TYPE

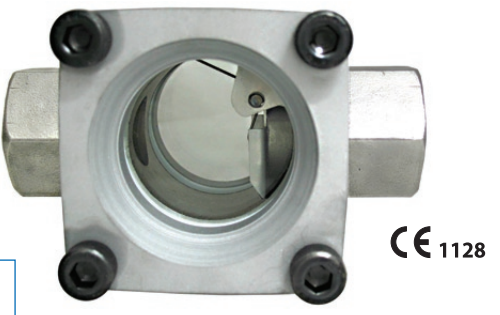

TB TYPE

Technical Data

Service: – Compatible gas and liquid
– Water treatment system
– Industrial flow system
– Double window indication

Material: Body–SS316; Paddle–SS316; Spring–SS316
Guge–Tempered glass; Gasket–Teflon, Gore Tex, Graphite

Max working temperature: 150°C (Teflon), 300°C (Gore-Tex)

Max working pressure: TA type-10 kg/cm^2 at 25°C water
TB type-15 kg/cm^2 at 25°C water

Dimension

(A) TA Type

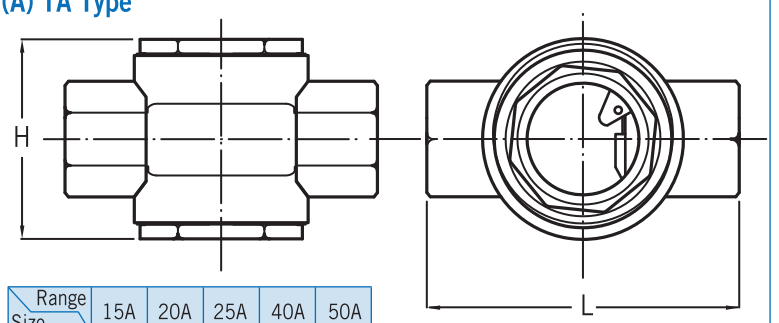

Range / Size	15A	20A	25A	40A	50A
L	114	114	114	130	150
H	72	72	72	120	136

(B) TB Type

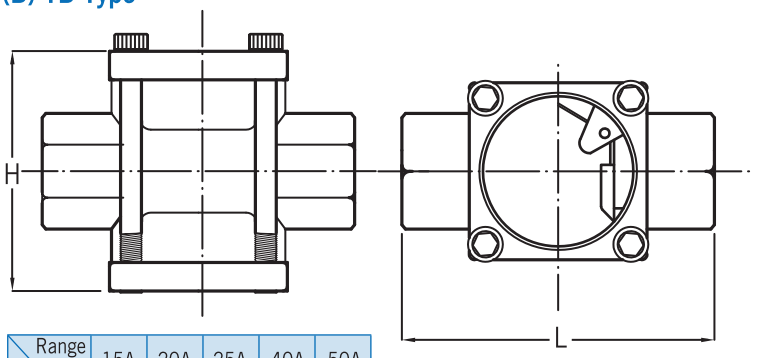

Range / Size	15A	20A	25A	40A	50A
L	114	114	114	130	150
H	72	72	72	115	129

unit=mm

Mounting Position

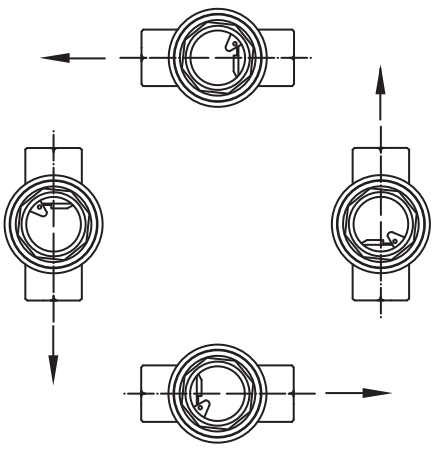

Ordering Information

TA/TB	Code	Model
	S	Wetted parts are SS316

Code	Size
	(1) 15A (2) 20A (3) 25A (4) 40A (5) 50A

Code	Connection Thread
	(1) NPT (2) PF (3) Option

Code	Gasket Material
	(1) Teflon (2) Gore-Tex (3) Graphite

					Complete Ordering Code

WWW.NEW-FLOW.DE | Tel: +49 3682 49099 | Fax: +49 3682 49093 | E-Mail: info@mess-regel.de