THERMOCOUPLE AND RTD ASSEMBLIES

Head Type Technical Data



HN TYPE

HN Type

Protection: IP67
Material: Aluminum Alloy
Weight: 264g
Protection tube connection:
½",¾"(PF,NPT,BSP),M20X1.5
Extension wire connection:
½",¾"(PF,NPT,BSP),M20X1.5
Other specifications are available on request.

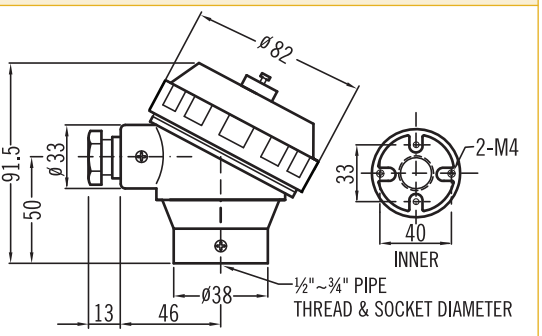



HP TYPE

HP Type

Protection: IP65
Material: Polypropylene
Weight: 112g
Protection tube connection:
½"NPT,½"BSP
Extension wire connection:
¾"NPT, M20X1.5
Other specifications are available on request.

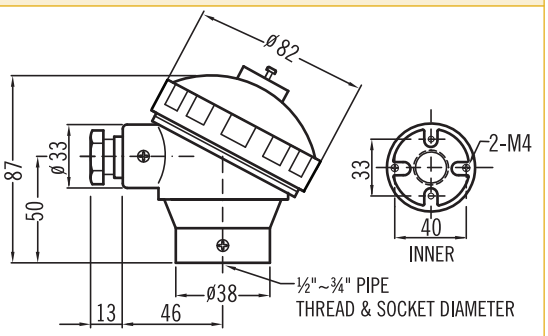



HD TYPE

HD Type

Protection: IP67
Material: Aluminum Alloy
Weight: 158g
Protection tube connection:
½"PF,½"BSP
Extension wire connection:
M22X1.5, PG16
Other specifications are available on request.

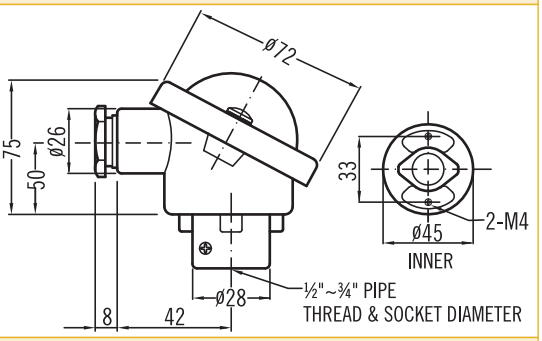



HI TYPE

HI Type

Protection: IP67
Material: Cast Iron
Weight: 1600g
Protection tube connection:
½",¾"(PF,NPT,BSP),M20X1.5
Extension wire connection:
½",¾"(PF,NPT,BSP),M20X1.5
Other specifications are available on request.

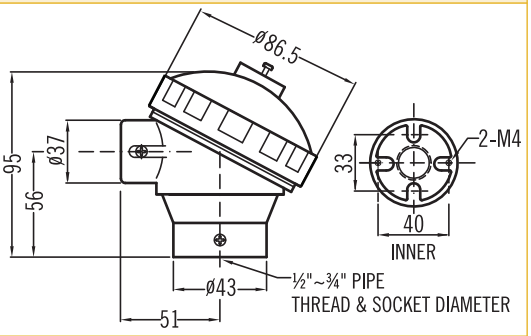



HB TYPE

HB Type

Protection: IP65
Material: Bakelite
Weight: 156g
Protection tube connection:
½"PF
Extension wire connection:
½"PF
Other specifications are available on request.

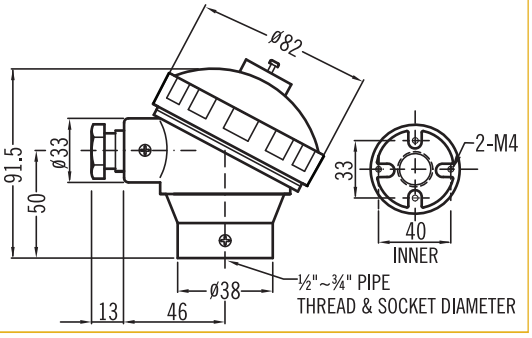

WWW.NEW-FLOW.DE | Tel: +49 3682 49099 | Fax: +49 3682 49093 | E-Mail: info@mess-regel.de

Head Type Technical Data



XDS TYPE

XDS / XDA Type

Material: XDS-SS316; XDA-Aluminum alloy
Weight: XDS-1278 g; XDA-460 g
Protection tube connection:
½"PF, ¾"PF, ½"NPT, ¾"NPT
½"BSP, ¾"BSP, G½", G¾"
M20x1.5, M24x1.5, M25x1.5
Extension wire connection:
M20x1.5, M25x1.5, ½"NPT, ¾"NPT
EC certificate no.: BSI 07 ATEX 1532458U
ATEX directive code: II 2 G D
Standard code: Ex d IIC T6, Ex tD A21 T100°C IP6x Ta= –20°C to +40°C
FM Approvals: XP/I/1/ABCD/T6; DIP/II,III/1/EFG/T6; Type 4X
Explosionproof for Class I, Division 1, Groups A,B,C and D; and dust-ignitionproof for Class II, III Division 1, Groups E,F and G, hazardous (classified) locations; indoor / outdoor (NEMA Type 4X).

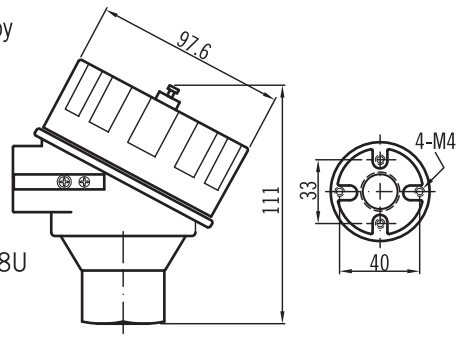



XDA TYPE



S1 TYPE

S1 & S2 Type

Protection: Explosion proof. EExdIICT6 IP65
Material: Aluminum Alloy

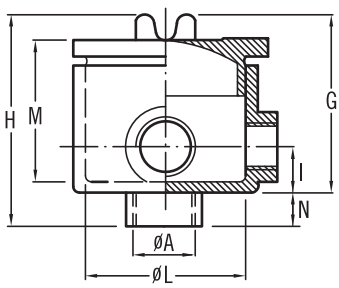

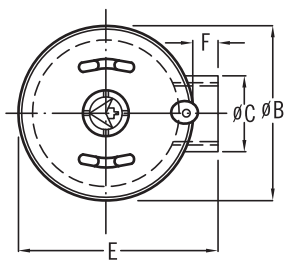

Type	Dimensions unitmm											Terminal Block (on request)	Weight Gr.
	ØA	ØB	ØC	E	F	G	H	I	ØL	M	N		
S1	½"	70	31	79	9	72	85	20	55	52	13	4x4 mm²	350
S2	¾"	90	38	100	10	78	92	24	76	69	14	4x4 mm²	510



S2 TYPE

WWW.NEW-FLOW.DE | Tel: +49 3682 49099 | Fax: +49 3682 49093 | E-Mail: info@mess-regel.de

Terminal Type-Terminal blocks for connection heads



N-2P-A N-3P-A N-3P-A(Y) N-4P-A N-6P-A

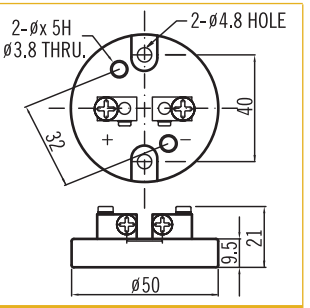

Material: Ceramic Al_2O_3 92%
Temperature limited: 600°C
Terminal block weight: 2P-A(72g); 3P-A(78g); 3P-A(Y)(72g); 4P-A(84g); 6P-A(94g)



N-2P-B N-3P-B N-3P-B(Y) N-4P-B N-6P-B

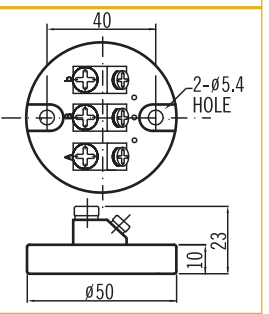

Material: Bakelite
Temperature limited: 180°C
Terminal block weight: 2P-B(56g); 3P-B(68g); 3P-B(Y)(44g); 4P-B(84g); 6P-B(66g)

*



M-2P-C M-3P-C M-4P-C M-6P-C

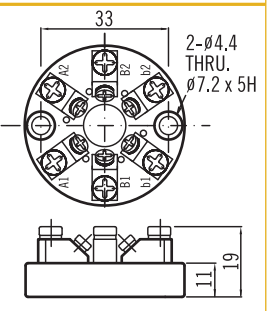

Material: Ceramic
Temperature limited: 600°C
Terminal block weight: 2P-C(34g); 3P-C(38g); 4P-C(42g); 6P-C(54g)

*



D-2P-A D-3P-A D-4P-A D-6P-A

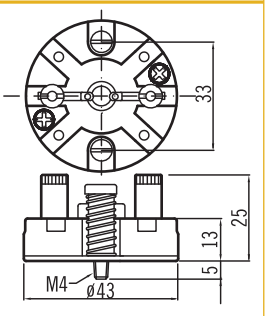

Material: Ceramic Al_2O_3 92%
Temperature limited: 600°C
Terminal block weight: 2P-A(66g); 3P-A(72g); 4P-A(78g); 6P-A(88g)

*



D-2P-B D-3P-B D-4P-B D-6P-B

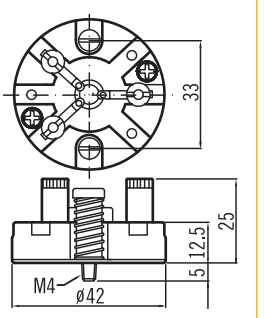

Material: Bakelite
Temperature limited: 180°C
Terminal block weight: 2P-B(48g); 3P-B(54g); 4P-B(60g); 6P-B(72g)

*



DS-2P-C DS-3P-C DS-4P-C DS-6P-C

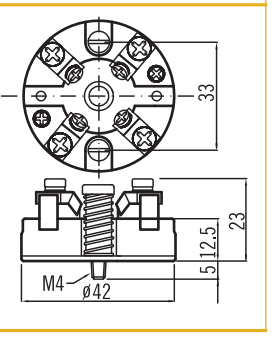

Material: Ceramic
Temperature limited: 600°C
Terminal block weight: 2P-C(64g); 3P-C(70g); 4P-C(74g); 6P-C(84g)

NOTE
* HD Type: Head Type
HD only choose these terminal blocks of type D-2P-A/M-6P-C/D-3P-B/DS-4P-C.
All type of terminal blocks are suitable for other head.

WWW.NEW-FLOW.DE | Tel: +49 3682 49099 | Fax: +49 3682 49093 | E-Mail: info@mess-regel.de