NEW-FLOW ISO 9001 REGISTERED

MASS FLOW METERS

ULF SERIES – Without LCD Display – Top Electric Connection Type





±1% Accuracy
Linear Output
Thermal Technology
For Using in Non Corrosive Gas
Power Supply Included

The NEW-FLOW Thermal Mass Flow Meters provide high performance. Thermal Technology offers advantages in accuracy, sensitivity and turn quality components and the latest technology are combined to provide reliable, compact meters and controllers. The ULF Series comes an without an LCD display, and all models come with linear 0-5 VDC and 4-20 mA output.The ULF Series measures the mass flow rate of gases in 23 ranges from 0-10 SCCM to 0-100 SLM as shown in the range table.

Technical Data

Wetted Material: Standard flowbody–SS316; Tapcon; option available.
O-ring–Viton
Output Signal: 0-5 VDC Linear min. load 1000Ω or 4-20 mA Linear, loop resistance 500Ω
Input Power: 24 VDC standard; optional power supply 15 VDC 115 VAC, 220 VAC @500mA
Accuracy: ±1% FS (including linearity)
Turn Down Ratio: 100:1
Repeatability: ±0.15% FS or better
Electric Connection: 9 Pin Sub "D"
Process Connection: ¼"NPT female
Range: 0-10 SCCM to 0-100 SLM
Minimum Pressure: 40" H_2O
Max Pressure: SS316–500 psig; Tapcon–250 psig
Temperature Range: 0~50°C
Response Time: 1 Second
Temp. Coefficient: 0.05% Full Scale per 1°C or better
Pressure Coefficient: 0.01% Full Scale per PSIG or better
Weight: app. 1.08 kg with power supply

Dimensions

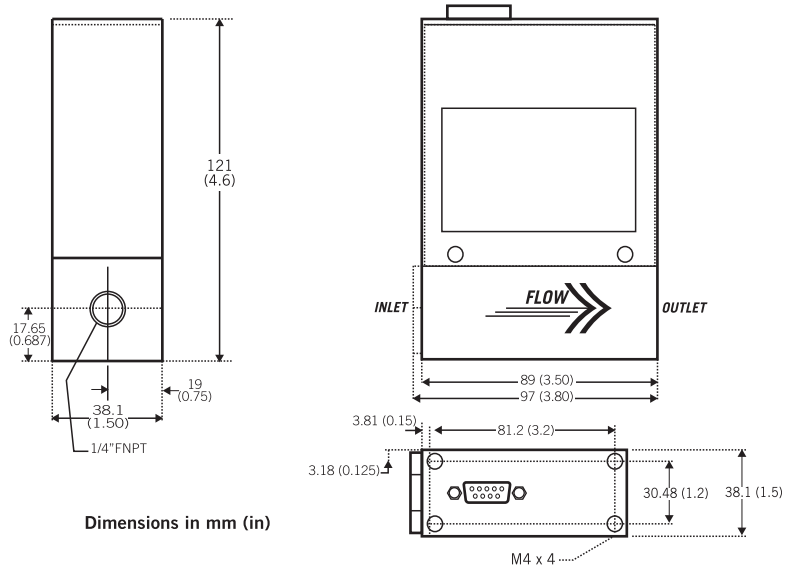

Dimensions in mm (in)

Range Table

Code	SCCM	Code	SLM	Code	SLM
00	0-10	06	0-1	14	0~35
01	0-20	07	0-2	15	0~40
02	0-50	08	0-5	16	0~45
03	0-100	09	0-10	17	0-50
04	0-200	10	0-15	18	0~55
05	0~500	11	0-20	19	0-60
		12	0-25	20	0-65
		13	0-30	21	0-70
				22	0-75
				23	0-100
				24	*Custom Flow Rate

Note. *Please notice that the max. flow rate is 100 SLM.

Ordering Information

ULF	Code	Flow Range
	00~23	Please refer to the measure range table.
	24	Custom size (please directly fill in the requested range)

Code	Wetted Parts Material
	(A) SS316 **(T)** Tapcon **(O)** option

Code	Process Connection
1	¼"NPT(F)

Code	Display
W	Without display

Code	Output Signal
	(1) 0-5 VDC **(2)** 4-20 mA

Code	Input Power
	(1) 24 VDC **(2)** 15VDC

Code	Power Supply for 24VDC
	(1) With **(2)** Without

ULF								Complete ordering code

GMR Gross-Mess-Regeltechnik
Zella-Mehlis, Deutschland
Tel: +49 3682 49099 | Fax: +49 3682 49093
E-Mail: info@mess-regel.de | WWW.NEW-FLOW.DE