PLASTIC FLOW METER

VF200 – With alarm switch type, Weather proof IP65
– Without alarm switch type



Technical Data

Service: Water, Air
Wetted parts material:
Body: Polycarbonate (P.C); Polysulfone (PSU) available
O-ring: Viton
Float: –magnet cover with Polypropylene (P.P) or SS316
–If the liquid temperature > 80°C, the float coating should be PVDF
Connection: SS316; Plastic (PP, PVC, PVDF)
Connection size: 3/8", 1/2", 3/4"NPT female available
Mounting: Vertical position
Pressure limits: 300psig (20bar) @100°F (38°C)
Temperature limits:
–PC body tube with SS316 or PVDF connection: -5°C ~ +80°C
–PC body tube with PP or PVC connection: -5°C ~ +54°C
–PSU body tube with SS316 connection: -5°C ~ +120°C
–PSU body tube with PVDF connection: -5°C ~ +120°C
Accuracy: ±5% full scale
Alarm switch: One setting point, form A N.O. type bistable switch
Switch rating: AC 125V 0.5A / DC 100V 10W / Max. DC 250V<1mA
Weight: approach 0.35kg (plastic)
(Contact setting point should be within 10% to 80% of F.S)

Dimensions

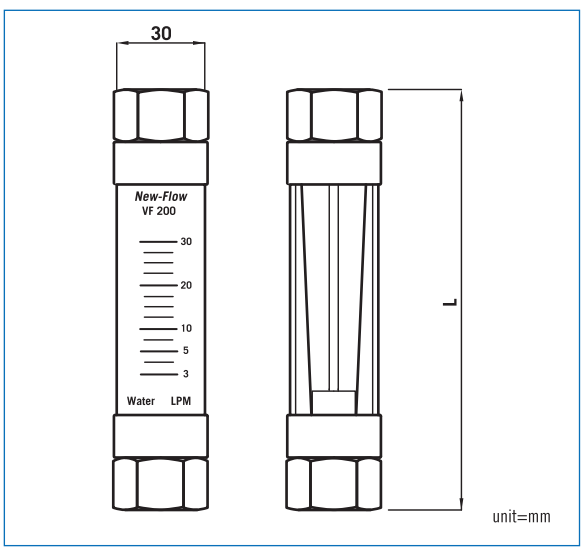

Flow Direction Types

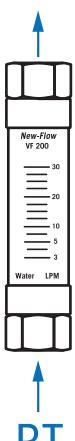

Ordering Information

VF200	Code	Flow Range
	A-1	Water (LPH-Litter per Hour)
		(1) 6~60 **(2)** 12~120 **(3)** 25~200 **(4)** 40~300
	A-2	Water (LPM- Litter per Minute)
		(5) 0.1~1 **(6)** 0.2~2 **(7)** 0.6~5 **(8)** 0.5~3 **(9)** 1~10
	B	Air (LPM-Normal Litter per Minute)
		(10) 6~30 **(11)** 10~60 **(12)** 10~100 **(13)** 15~150 **(14)** 30~300

Code	Alarm Switch
1R	One setting point
0	Without alarm

Code	Body Material
PC	Polycarbonate
PSU	Polysulfone

Code	Connectoin Material
	(1) SS316 **(2)** P.P **(3)** P.V.C **(4)** PVDF

Code	Process Connection in Female
A	3/8"NPT (L=134mm)
B	1/2"NPT (L=134mm)
C	3/4"NPT (L=162.5mm) (switch type not available)

Code	Flow Direction
BT	Bottom to Top

VF200							Complete ordering code

WWW.NEW-FLOW.DE | Tel: +49 3682 49099 | Fax: +49 3682 49093 | E-Mail: info@mess-regel.de