TUNING FORK VIBRATING LEVEL SWITCH
VLS5500



Housing: IP65
Explosion Proof:
Class I, Groups A, B, C, D;
Class II, Groups E, F, G; NEMA4X

VLS5500 Series are assembled with a tuning fork and energized sensor. It vibrates frequently with mechanical resonance to detect level of powders or granular bulk solids.

Technical Data

Using in powder or solids
Wetted part material: 316 stainless steel
Thread connection: 2" NPT, 2" BSP
Flange connection: from 2" to 3", JIS, ANSI, DIN available
Detection length:

	Minimum	Maximum
Thread	200mm	450mm
Flange	245mm	450mm

Working temperature: -30°C~+80°C
Working pressure: maximum 100 kg/cm², up to 400 kg/cm² on request
Liquid viscosity: 0.2~10000 mpas
Liquid density: 0.6 g/cm³~2.5 g/cm³
Housing: IP65
Explosion Proof: Class I, Groups A, B, C, D; Class II, Groups E, F, G; NEMA4X
Power Supply: 110VAC, 220VAC, 24VDC
Contact Form: SPDT
Contact Rating: 20A/125VAC, 12A/250VAC

Housing Dimensions

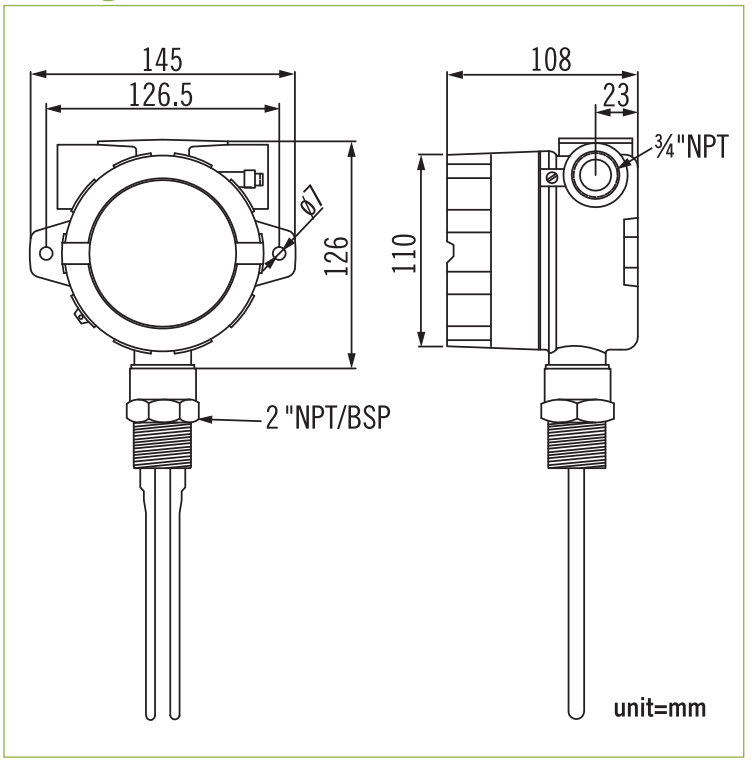

Application and Installation

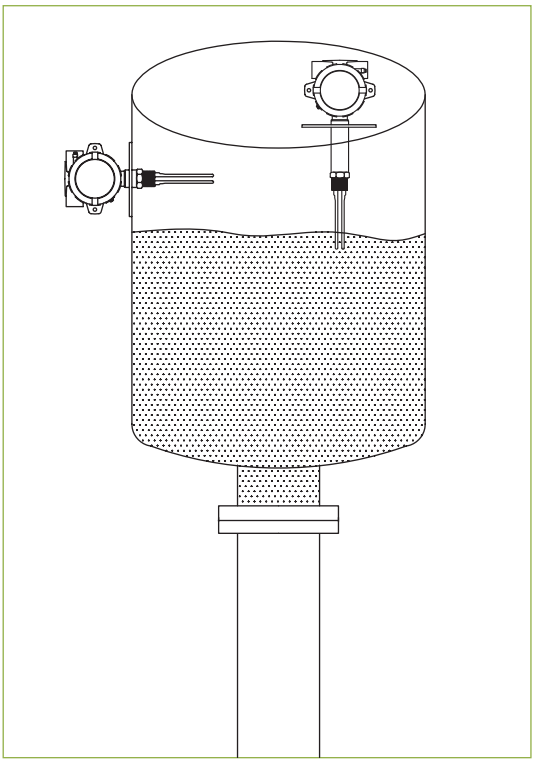

WWW.NEW-FLOW.DE | Tel: +49 3682 49099 | Fax: +49 3682 49093 | E-Mail: info@mess-regel.de

Process Connections

Thread Type / Flange Type DIN, ANSI, JIS 2"~3"

STANDARD LENGTH

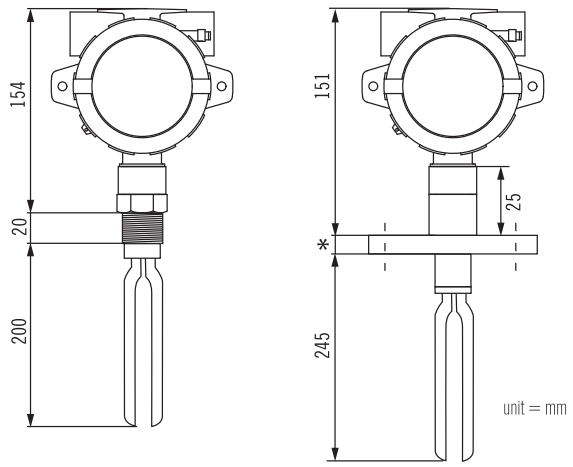

*Dimension varies according to flange rating

Thread Type / Flange Type DIN, ANSI, JIS 2"~3"

AVAILABLE LENGTH

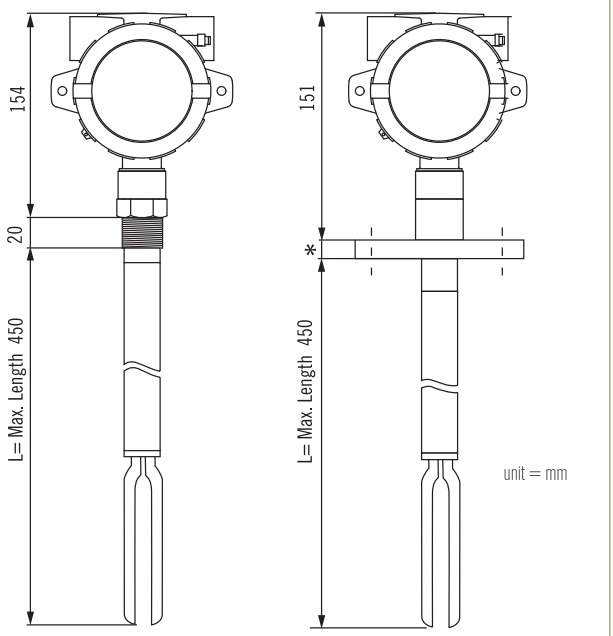

*Dimension varies according to flange rating

Ordering Information

VLS5500	Code	Process Connection
		(1) Thread type (2) Flange type

Code	Connection Size
	(A) 2" (B) 3"

Code	Connection Rating
	Thread: (1) NPT (2) BSP Flange: (3) JIS10K (4) JIS20K (5) ANSI 150# (6) ANSI 300# (7) PN10 (8) PN16 (9) PN25 (0) Option: fill in the requested rating _____

Code	Electronic Connection
	(E) ¾"NPT Female, Standard (F) ½"NPT Female

Code	Insertion Length
S	Standard
L	Fill in the requested length ie: L=300mm

Code	Power Supply
	(A) 110VAC (B) 220VAC (C) 24VDC

VLS5500							Complete Ordering Code

WWW.NEW-FLOW.DE | Tel: +49 3682 49099 | Fax: +49 3682 49093 | E-Mail: info@mess-regel.de